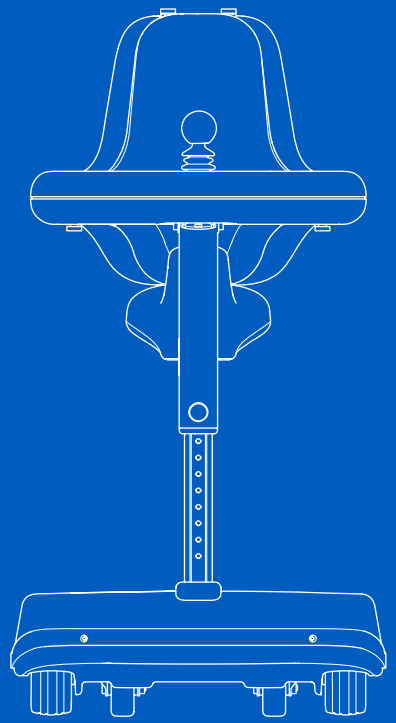

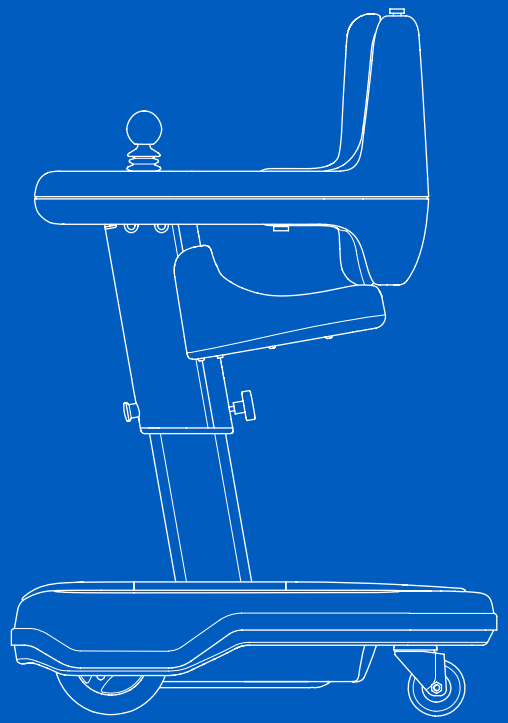

Explorer Mini

User manual | American English

Welcome to the Permobil family

Your child's journey to explore the world with the Explorer Mini has just started, and we hope that he or she will have lots of fun together with the Explorer Mini. This wheelchair is designed to provide the highest possible comfort and enjoyment while meeting both safety and environmental requirements.

Produced and published by Permobil
Edition: 10
Date: 2026-01-12
Order no: 337358 eng-US

How to contact Permobil

Permobil Inc.
300 Duke Drive
Lebanon, TN 37090
USA

+1 800 736 0925

+1 800 231 3256

support@permobil.com

www.permobil.com

Production units. See page 81.

Head office of the Permobil group

Permobil AB
Klökanvägen 16
863 41 Sundsvall
Sweden

+46 60 59 59 00

info@permobil.com

www.permobil.com

1 Important information 4

1.1 Indications for use 4
1.2 Warranty 4
1.3 Product approval 4
1.4 Technical support 4
1.5 Reporting incidents 5
1.6 Spare parts and accessories 5
1.7 Ordering documentation 5
1.8 Scrapping and recycling 5

2 Safety instructions 6

2.1 Preparation checklist 6
2.2 Electromagnetic interference 6
2.3 Descriptions of admonitions 7
2.4 Warnings and precautions 7

3 Getting to know your wheelchair 17

3.1 Overview 18
3.2 Technical specifications 19
3.3 Design and function 25
3.4 Control panel 30
3.5 Accessories 35
3.6 Labels 35

4 Adjustments 40

4.1 Seat 40
4.2 Table and backrest unit 45
4.3 Tray top 47
4.4 Cushion 48

5 Handling and driving 49

5.1 Positions for driving 49
5.2 Turning on the Explorer Mini 51
5.3 Turning off the Explorer Mini 52
5.4 Battery saving function 53
5.5 Driving technique 53
5.6 Adjusting the maximum speed setting 55
5.7 Locking and unlocking the Explorer Mini 56
5.8 Driving restrictions 58
5.9 Joystick error when the Explorer Mini is turned on 63
5.10 Joystick error and flashing LEDs 64
5.11 Electrical fault 64
5.12 Batteries 64
5.13 Transporting the wheelchair 67

6 Maintenance and repairs 71

6.1 Maintenance and inspection schedule 72
6.2 Batteries and storage 73
6.3 Cleaning 74

7 Troubleshooting 76

8 Electromagnetic compatibility 79

8.1 Electromagnetic emissions 80

1 Important information

Before your child starts to use the Explorer Mini, it is important that you read and understand the contents of this user manual, and in particular the safety instructions.

This manual is intended to be read and applied by the caregiver.

It is also possible to obtain information concerning our products from our website: www.permobil.com.

All information, pictures, illustrations and specifications are based upon the product information available at the time this user manual was printed. Pictures and illustrations used in this manual are representative examples and not intended to be exact depictions of the various parts of the Explorer Mini.

We reserve the right to make changes to the product without prior notice.

For those who are visually impaired, this document can be downloaded at www.permobil.com. The PDF reader magnifying tool can be used to achieve the desired text and image size.

1.1 Indications for use

The Explorer Mini is a pediatric powered wheelchair with the intention to provide mobility to pediatric users weighing up to 16 kg (35 lb.) and maximum length of up to 100 cm (39″) tall, between 12-36 months of age, who position themselves in a sitting position in the wheelchair and has the capacity to operate a joystick hand control. Explorer Mini is intended for use indoor and outdoor on dry, firm, flat surfaces.

1.2 Warranty

Contact your dealer or Permobil Inc. USA for information about the warranty period for this product.

Product Warranty Information sets forth the conditions of the warranty. For further information about applicable warranties, see https://permobilus.com/support/warranties/.

NOTICE Unapproved replacement of parts

1.3 Product approval

This product meets the requirements of:

- EN 12184
- ISO 7176-9
- ISO 7176–14
- ISO 7176–15
- ISO 7176-16
- ISO 7176–21
- ISO 7176–8

1.4 Technical support

In the event of technical problems, contact your dealer or call Permobil Inc. USA on 1-800-736-0925.

Be prepared to provide the wheelchair serial number, located on the chassis, to ensure proper support. See 3.6.1 *Serial number label on the base module*, page 36.

1.5 Reporting incidents

If an incident occurs, please contact your nearest Permobil representative. This is usually the same person you were in contact with at the time of purchase. To get in touch with your contact, use the link at www.permobil.com. Open your country page and the contact page. The page provides the necessary contact information and a document to help you provide us with the information we need to investigate the incident. Provide as much of the information as possible; it will be of great help to us.

1.6 Spare parts and accessories

Spare parts and accessories must be ordered through your dealer.

Only use accessories and spare parts that are authorized by Permobil.

The expected service life of this product is five years.

1.7 Ordering documentation

Should you need another copy of this manual, one may be ordered from Permobil. Ask for the order number specified on the back cover.

1.8 Scrapping and recycling

Contact Permobil for information about scrapping agreements in force.

2 Safety instructions

A power wheelchair is a motorized vehicle and therefore special care must be taken when using it.

Carefully read and follow all instructions and warnings in the manual supplied with the Explorer Mini. Read the safety instructions and warnings very carefully to prevent injury to your child and to reduce the risk of damage to the Explorer Mini.

Permobil is not responsible for personal injuries or property damage resulting from any person's failure to follow the warnings and instructions in this user manual. Permobil is not responsible for injuries or damage resulting from failure to exercise good judgment.

The Explorer Mini is a medical device prescribed by a healthcare professional. The final selection and purchasing decision about the type of wheelchair is the responsibility of the of the child's caregiver and his or her healthcare provider. Permobil is not responsible for inappropriate prescriptions or selections of models, features or improper installations on the wheelchair.

The Explorer Mini must only be used when an adult is close and monitors the child continuously. Make sure to test the buttons and their settings on the control panel, before your child starts to use the Explorer Mini.

All parts of the Explorer Mini that the user will get in contact with are made of biocompatible material.

2.1 Preparation checklist

The Explorer Mini is fully assembled when it is delivered. In addition to the Explorer Mini, the following parts are supplied:

- Cushion (attached to the backrest).
- User manual for the Explorer Mini.
- Battery charger.
- User manual for the battery charger.
- Sticker kit.

Before you start to use the Explorer Mini, make sure that nothing has happened to it during delivery:

- Do a check that all parts that should be supplied are included. If you think that something is missing, contact your dealer as soon as possible.
- Do a check that no delivered parts are damaged. If you think that something is damaged or shows to be incorrect, contact your dealer as soon as possible.
- Do a check that no parts have been loosened on the Explorer Mini and that there are no loose small parts. If you find small loose parts, contact your dealer as soon as possible.

Before you start to use the Explorer Mini, we also recommend that you charge the batteries. For instructions on how to charge the batteries, see 5.12.1 *Charging the batteries*.

2.2 Electromagnetic interference

The electronics in your power wheelchair may be affected by electromagnetic interference caused by electromagnetic energy from radio wave sources, for example cell phones, wireless internet connections, and radio and TV stations. Similarly, the electronics in your power wheelchair may affect the immediate surroundings with electromagnetic interference, for example certain alarm systems.

Each power wheelchair can resist electromagnetic interference up to a certain intensity, which is called its immunity level and that is measured in volts per meter (V/m). The Explorer Mini has an immunity level of 20 V/m when tested without accessories, which is a generally achievable and useful immunity level (as of May 1994).

To prevent that your power wheelchair moves unintendedly because of electromagnetic interference, follow these instructions:

- Be careful about using hand-held personal communication devices, such as two-way radios, citizens band radios and cell phones, while your power wheelchair is turned on.
- Try to avoid coming close to nearby radio and TV stations.

If your power wheelchair moves unintendedly, turn it off. Contact your nearest Permobil representative to report the incident and note whether there was a radio wave source nearby.

2.3 Descriptions of admonitions

The following admonitions describing warnings, remarks and explanatory texts are used throughout this manual to draw attention to items of significant importance to safety:

DANGER!

Indicates a dangerous situation which, if not avoided, could result in death as well as serious damage to the product or other property.

WARNING!

Indicates a hazardous situation which, if not avoided, could result in serious injury or death as well as damage to the product or other property.

CAUTION!

Indicates a hazardous situation which, if not avoided, could result in minor or moderate injury as well as damage to the product or other property.

NOTICE

Indicates an important but not hazardous situation which, if not avoided, could result in damage to the product or other property.

2.4 Warnings and precautions

CAUTION! Rx Only

This device is designed to be used only by individuals to whom it was prescribed by a healthcare provider.

WARNING! Do not let a child use the Explorer Mini alone

The Explorer Mini must only be used when an adult is present and continuously monitors the child.

WARNING! Do not put heavy objects on the table

Do not put heavy objects on the table. If you do, it can affect the stability of the Explorer Mini.

CAUTION! Operation

The Explorer Mini must not be driven on public streets, roads, stairs or escalators.

CAUTION! Lifting restrictions

Do not lift or move the wheelchair by any of its removable parts. Doing so could lead to personal injury and property damage, including damage to the wheelchair.

CAUTION! Operation, pulling, and minor impacts

Do not use the wheelchair to pull any kind of object and never hang objects on the Explorer Mini. Doing so could lead to personal injury and property damage, including damage to the wheelchair.

If the Explorer Mini becomes damaged in any way, stop using it. Failure to do so could lead to personal injury.

WARNING! Modifications

Do not modify the Explorer Mini or any of its components. Allowable adjustments are addressed in the Adjustments chapter of this manual.

Initial setup and all repairs must be performed by a qualified service technician.

WARNING! Weight limitations

The child must not use the Explorer Mini if he or she exceeds the maximum user weight as listed in the technical specifications section of this manual.

CAUTION! Different driving range

The value of the driving range that is recorded in the technical specifications of this user manual has been measured with battery status and environmental conditions specified by ISO 7176-4:2008. When using the Explorer Mini, the driving range might be different from the specified value because of different battery status and environmental conditions.

WARNING! Passengers are not permitted

The Explorer Mini must only be used by the child to whom it was prescribed. The child must not attempt to carry passengers. If he or she does, the Explorer Mini can tip and cause bodily injury.

WARNING! Prevent accidental movement

Make sure that the Explorer Mini is turned off before the child is put in or lifted out of it.

CAUTION! Damage during transportation

You must inform Permobil as soon as possible after the event if the wheelchair and its accessories have suffered transportation damage, damage during driving or damage from other causes. There is a risk that the wheelchair and its accessories can no longer be used safely and securely. Contact your service provider or Permobil for further information.

DANGER! Do not use the Explorer Mini as a seat in a motor vehicle

The child must not sit in the Explorer Mini while the Explorer Mini is transported in a vehicle. The Explorer Mini is not designed to transport anyone inside a motor vehicle. There is a high risk of bodily injury if this safety instruction is not followed.

WARNING! Environmental conditions

Protect the wheelchair and its electronics from exposure to any type of moisture, including rain, snow, mud or spray. Exposure to moisture may cause the chair to short-circuit, catch fire and cause personal injury or property damage. If it has been exposed to moisture, do not operate your wheelchair until it has dried completely.

Do not use the Explorer Mini on icy, wet, or slippery surfaces.

WARNING! Hot surfaces in sunlight

Do not place the Explorer Mini in direct sunlight for an extended period of time. If you do, surfaces can get hot and cause bodily injury to the user.

WARNING! Be careful when using the wheelchair in oxygen rich environments

Be careful when using the Explorer Mini in environments where oxygen concentrations might be higher than normal, for example in a hospital ward where oxygen tubes are being used. A high concentration of oxygen implies an increased risk of fire.

NOTICE Flame resistance

The flame resistance depends on the usage and age of the wheelchair, and can change over time.

CAUTION! Maintenance and service

Only carry out the minor adjustments and maintenance specified in the user manual.

All other service, repairs and maintenance on Permobil products, including control system programming, must be performed by a qualified service technician authorized by Permobil. Incorrect settings may result in unsafe operation of the wheelchair and cause it to become unstable or uncontrollable. Such modifications also void the product's warranty.

CAUTION! Non-approved aftermarket accessories

Do not use parts or accessories not authorized by Permobil.

The use of non-approved aftermarket accessories and parts may cause changes in the wheelchair that make it unstable or uncontrollable.

The product warranty may be voided if unauthorized parts or accessories are used.

WARNING! Charging conditions to avoid the risk of fire or explosion

Only use chargers with a max 1.5 A charging current (average value). Batteries must not be charged outdoors, in a bathroom or a wet room. When the charger is connected, the wheelchair cannot be driven.

WARNING! Only use supplied battery charger

If you use other chargers it may cause problem to charge the wheelchair, the battery lifetime may be shortened, and the batteries, the electronics of the wheelchair or the charger may get damaged. It may also cause overheating and cause a risk of fire.

CAUTION! Recycling batteries

Used batteries must be disposed of responsibly in accordance with local recycling regulations.

NOTICE Storage

Always turn off the wheelchair when it is not in use.

Never store the wheelchair in a room where there is a risk of condensation (mist or moisture on surfaces) for example in pool areas, laundry rooms or similar.

If you are unsure how your wheelchair should be properly stored, contact your supplier or Permobil for more information.

WARNING! Damage and/or malfunctions

If you feel the Explorer Mini is not behaving as it should in any regard or if you suspect that something is wrong, stop use, turn off the wheelchair and contact your service provider or Permobil for further information.

NOTICE Flame resistance

Upholstered components have been tested for flammability. Plastic parts in contact with the user and upholstered parts meet the requirements of EN 1021– 2, and ISO 7176– 16. Upholstered parts also meet the requirements of
CAL TB 117–2013. Plastic parts encapsulating the electronics meet the requirements of UL94 V-0.

CAUTION! EMC requirements

The electronics in a power wheelchair can be affected by external electromagnetic fields (e.g. from cell phones). Similarly, the electronics in the wheelchair itself also emit electromagnetic fields that may affect the immediate surroundings (e. g. certain alarm systems in businesses).

The Electromagnetic Compatibility (EMC) limit values with respect to power wheelchairs are set forth in the international standard for powered wheelchairs, ISO 7176–21.

Our power wheelchairs comply with these limit values.

NOTICE Radio frequency transmitters

Radio frequency transmitters can affect the performance of the wheelchair. Do not use these types of devices close to the product.

WARNING! Discontinue use following a serious accident

Stop using the Explorer Mini if it has been dropped, crushed, exposed to fire, submerged in water, or involved in a vehicular accident, or other extraordinary event. Events like these can lead to significant damage that is impossible to detect upon inspection.

Damage caused by these types of incidents exceeds the limits covered by the manufacturer's warranty.

For further information, contact Permobil to get in contact with a technical service supervisor.

NOTICE Unapproved replacement of parts

If any part is replaced without approval from Permobil, the wheelchair warranty will become void. Permobil accepts no liability for any loss that occurs as a result of a control system component being opened, adjusted or modified without permission.

NOTICE Before turning off the main circuit breaker

Make sure that the power to the control panel is turned off before the main circuit breaker is turned off, to avoid an electrical fault when you start the Explorer Mini again.

NOTICE Investigate tripped main circuit breaker

A tripped main circuit breaker can indicate an electrical fault. The cause of a tripped main circuit breaker must be investigated and determined before resetting the circuit breaker. If your main circuit breaker trips repetitively, contact your service technician or dealer.

WARNING! Do not replace batteries

The batteries must only be maintained and replaced by an approved service technician.

NOTICE Only use supplied battery charger

Only use the supplied charger. If you use a different charger, you can harm yourself or the Explorer Mini.

WARNING! Be careful with new accessories

Make sure that a new accessory will not have unwanted effects on the Explorer Mini before using the accessory. Permobil is not responsible for unwanted effects caused by new accessories.

WARNING! Accident risk – Always replace missing labels

Never remove a label from the wheelchair. If a label becomes difficult to read or falls off, order a replacement label from Permobil.

WARNING! Do not adjust while the child is in the wheelchair

Do not adjust the settings while the child is in the Explorer Mini.

CAUTION! Pinch risk

There is a pinch risk when you adjust the height.

WARNING! Risk of injury

Make sure that the seat and the table and backrest unit are locked in their positions before the child sits in the Explorer Mini.

NOTICE Do not drive the wheelchair while the tray top is removed

Do not let the child drive the Explorer Mini while the tray top is removed. The child may press the maximum speed buttons and affect the speed of the wheelchair by mistake.

WARNING! Adapt the driving position to the child's needs

Make sure that the driving position is adapted to the child's needs. An adult or healthcare provider must decide which driving position is the most adequate one for the child.

CAUTION! Do a test of functions and settings

Do a test of applicable functions and adapted settings before the child will be using the Explorer Mini for the first time, to prevent accidental operation.

WARNING! Obstacles at head level

Make sure that there are no obstacles at head level for the child while he or she uses the Explorer Mini. Driving into obstacles at head level can cause injuries.

WARNING! Risk of tipping when driving backward

Make sure that the child does not drive backward into an obstacle at backrest height where the base module can move freely underneath, such as a table or a bed. If the child continues to drive backward, the Explorer Mini can become less stable and tip forward or sideways.

WARNING! Do not use the joystick as a support

Do not use the joystick as a support. If you do, you can lose control of the wheelchair.

WARNING! Adapt the speed to the child's needs

An adult or healthcare provider must decide which maximum speed setting is adequate for the child, taking into consideration his or her age and capacity. An adult must continuously monitor the child and make sure that the maximum speed is set to a speed that the child can handle. Always start with the lowest maximum speed setting. Do not increase the maximum speed until the child has experience of using the Explorer Mini.

CAUTION! Driving in narrow spaces

Do not use the highest maximum speed setting when driving in narrow spaces.

WARNING! Do not use the Explorer Mini in moist conditions or rain

The Explorer Mini must not be exposed to moist conditions or rain. It can cause an injury to the child or cause damage to the Explorer Mini.

WARNING! Dangerous environment

Do not use the Explorer Mini in environments that may cause a risk of injury, for example close to traffic, staircases, high obstacles and steep hills.

WARNING! Tipping risk

The base module must not hit the ground when driving over obstacles, on uneven surfaces or on slopes. Make sure that there is enough space between the base module and the ground to prevent the risk of tilting.

CAUTION! Do not use the Explorer Mini on dirty ground

Debris or dirt might get in the wheel shaft or the bearings if the ground is dirty. The driving performance might decrease and there is a risk of damage to the mechanics.

WARNING! Driving — high obstacles

Do not drive over obstacles higher than 12.5 mm (0.5″). There is a risk that the Explorer Mini might tilt.

WARNING! Risk of tipping on steep slopes

Do not drive the wheelchair on side slopes steeper than 6°. There is a risk of tipping.

WARNING! Risk of tipping on uneven surfaces

Take great care when driving on side slopes with an uneven surface.

WARNING! Risk of tipping when driving downhill

Do not drive downhill on gradients greater than 6°.

WARNING! Risk of tipping on uneven surfaces

Take great care when driving on an uneven surface downhill.

WARNING! Increased stopping distances

The stopping distance increases when you drive downhill.

WARNING! Risk of tipping when driving uphill

Do not drive uphill on gradients greater than 6°.

WARNING! Risk for overheating, sparks or short-circuit

- Do not cover the battery charger, and do not place it close to other objects during the charging procedure. The charger can get hot.
- If the charging connector to the battery charger or the socket on the Explorer Mini is damaged or gets too hot during charging, it must be replaced. Contact your dealer for replacement of parts.

WARNING! Do not charge the Explorer Mini outdoors

Do not charge the Explorer Mini outdoors.

CAUTION! Only use supplied cable to charger socket

Do not connect a programming cable to the socket and do not use the socket as power supply for other electrical devices. This may damage the control system and have effect on the performance of EMC (electromagnetic compatibility).

NOTICE Discharged batteries

Should the batteries be drained completely, charge them again as soon as possible since completely drained batteries may reduce battery service life.

NOTICE Do not use an extension cable

Do not use an extension cable with the supplied charger cable. Make sure that the Explorer Mini is positioned close enough to a wall socket before connecting the cable.

CAUTION! Sharp edges on cable

Be careful when connecting the cable to the socket. The edges of the three-pin contact are sharp.

NOTICE Prevent sunlight

Make sure that the Explorer Mini and the charger are not positioned in immediate sunlight during charging.

NOTICE Automatically locked for driving

The Explorer Mini is automatically locked for driving during charging. If it is still possible to drive during charging, contact your dealer.

CAUTION! Maintenance by a qualified service technician

Only qualified service technicians should perform the maintenance and repair specified in this manual. Read all instructions carefully before proceeding. If any questions arise, contact Permobil for assistance.

3 Getting to know your wheelchair

3.1 Overview

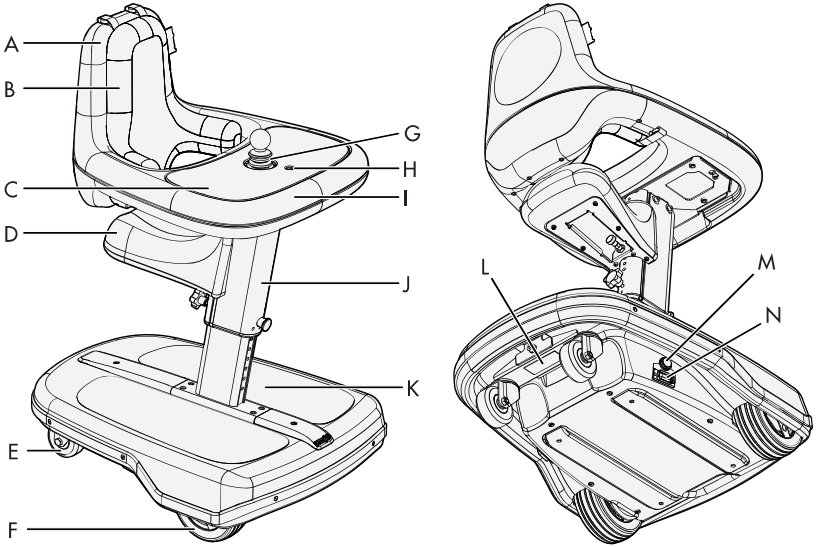

A. Backrest (part of the table and backrest unit)
B. Cushion
C. Tray top
D. Seat
E. Caster wheel
F. Drive wheel
G. Joystick
H. On/off button
I. Table (part of the table and backrest unit)
J. Column
K. Base module
L. Serial number label
M. Start button
N. Main circuit breaker

3.2 Technical specifications

Product name (P):	Explorer Mini
Wheelchair class (W):	A
Height (A)	Minimum: 725 mm (28″) Maximum: 920 mm (36″)
Width (B)	490 mm (19″)
Length (C)	635 mm (25″)

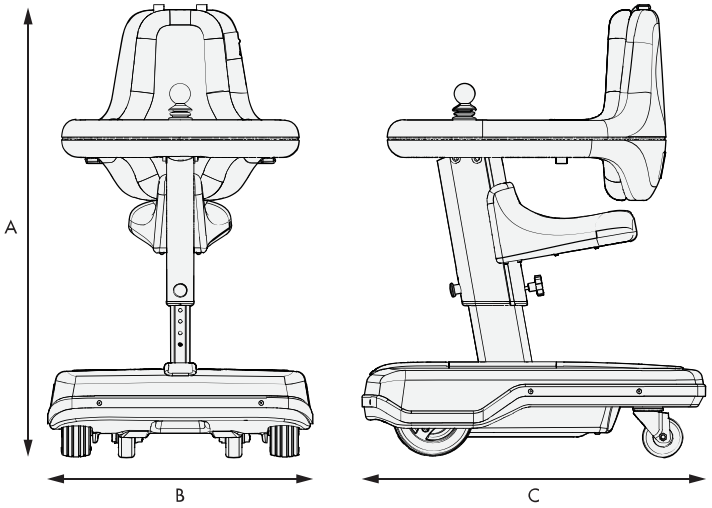

3.2.1 Dimensions and weight

Height	Minimum: 725 mm (28″) Maximum: 920 mm (36″) 9 steps at 25 mm (1″) each.
Overall height in standing position	920 mm (36″) The measurement is done from the test surface to the highest part of the wheelchair (the backrest) when the table and backrest unit is adjusted to its highest position.
Stowage height in standing position	725 mm (28″)

Width, including overall width in standing position	490 mm (19″)
Length	635 mm (25″)
Full overall length in standing position	635 mm (25″)
Weight, including batteries	23.8 kg (52 lb.)
Weight of chassis, heaviest removable part	22.9 kg (50 lb.)
Minimum transportation height	722 mm (28″)
Minimum transportation width	490 mm (19″)
Minimum transportation length	635 mm (25″)
Column width	52 mm (2″)
Table width	440 mm (17.3″)
Table length	520 mm (20.1″)
Table depth	240 mm (9.4″)
Distance from table to base module (footrest)	Minimum: 360 mm (14.2″) Maximum: 560 mm (22″) 9 steps at 25 mm (1″) each.
Distance from table to backrest	155 mm (6.1″)
Distance between armrests	250 mm (9.8″)
Distance from armrest to seat	Minimum: 155 mm (6″) Maximum: 215 mm (8″)
Seat width	190 mm (7.5″)
Seat depth	165 mm (6.5″)
Seat plane angle	5°
Height from seat to floor	Minimum: 300 mm (12″) Maximum: 560 mm (22″) 9 steps at 25 mm (1″) each and 4 steps at 15 mm (0.6″) each.
Distance from footrest to seat	150–390 mm (6″–15″)

Leg to seat surface angle	34.5°–155°
Backrest angle	93°
Backrest height	360 mm (14″)

3.2.2 Wheels

Tire types	Solid		
Drive wheel dimensions	Width (A): Outside diameter (B):	50 mm (2″) 150 mm (6″)	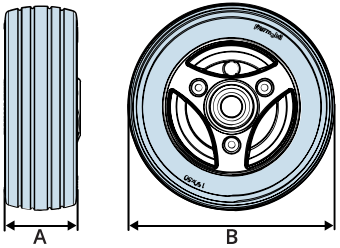
Caster wheel dimensions	Width (A): Outside diameter (B):	30 mm (1″) 75 mm (3″)	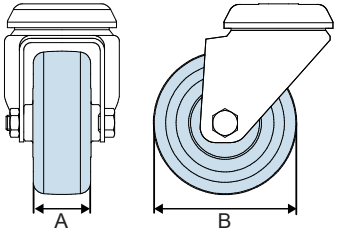

3.2.3 Performance

The performance values represent the extreme conditions under which the Explorer Mini could be operated in a controlled test environment. However, information provided in chapter 5 *Handling and driving* describes the safest, recommended conditions for driving the Explorer Mini in the real world.

Range	5.5 km (3.4 mi)

Maximum speed forward, including in standing position	2.3 km/h (1.5 mph)
Acceleration in standing position	0.62 m/s (2 ft/s²)
Minimum braking distance from maximum speed. The Explorer Mini will stop immediately.	0.3 m (1 ft.)
Retardation in standing position	0.78 m/s² (2.5 ft/s²)
Braking performance in standing position	Parking brakes facing uphill: 12° Parking brakes facing downhill: 15° Running brakes 0.2 m (0.7 ft.) on horizontal surface
Hill-climbing ability	3°
Obstacle climbing	12 mm (0.5″)
Obstacle climbing 50 cm (20″) run up	25 mm (1″)
Obstacle climbing in standing position	Forward with and without run-up: 25 mm (1″) Rearward with run-up: 17 mm (0.7″) Rearward without run-up: 10 mm (0.4″)
Obstacle descending in standing position	Forward and rearward: 50 mm (2″)
Rated slope	6°
Static stability downhill	15.2°
Static stability sideways	15.2°
Static stability uphill	15.2°
Static stability in standing position	Most stable ≥18° (18° is maximum of the inclined test plane.) Least stable 10°
Dynamic stability, traversing step forward, upward	25 mm (1″)

Dynamic stability, traversing step forward, downward	75 mm (3″)
Dynamic stability, traversing step rearward, upward	12 mm (0.5″)
Dynamic stability, traversing step rearward, downward	50 mm (2″)
Ability to negotiate obstacles, approach distance 0 cm (0″)	25 mm (1″)
Ability to negotiate obstacles, approach distance 50 cm (20″)	25 mm (1″)
Dynamic stability downhill	6°
Dynamic stability uphill	6°
Dynamic stability in standing position	Most stable 10° Least stable 6°
Minimum ground clearance with user weight	36 mm (1.4″)
Maximum user weight	16 kg (35 lb.)
Maximum user height	1,000 mm (39″)
Required width of angled corridor	590 mm (23″)
Required doorway entry depth	490 mm (19″)
Required corridor width for side opening exiting the corridor	500 mm (20″)
Required corridor width for side opening entering the corridor	500 mm (20″)
Pivot width	715 mm (28″)

Minimum turning diameter	960 mm (38″)
Static, impact, and fatigue strengths, in standing position	The hip and/or upper torso passes the static strength tests. The Explorer Mini does not incorporate a raising and lowering mechanism. The Explorer Mini endured 20,000 cycles in the modified multi drum fatigue test.

3.2.4 Batteries

Charging time	8 h
Battery weight	2 x 1.9 kg (4.2 lb.)
Cut-off voltage	21.5 V (during 255 s)

3.2.5 Circuit breakers

Main circuit breaker	5 A
Battery saver timeout	90 min

3.3 Design and function

The Explorer Mini is a battery powered wheelchair intended to be used as a mobility platform for children with mobility impairments. It is intended to be used indoors on dry, flat, firm, and clean surfaces and outdoors in dry weather on dry, paved, and flat surfaces. The Explorer Mini is not intended to be used as a seat in a motor vehicle.

WARNING! Do not let a child use the Explorer Mini alone

3.3.1 Seat

The seat height has four different settings. If needed, the seat can be removed.

For instructions on adjustments of the seat, see 4 *Adjustments*.

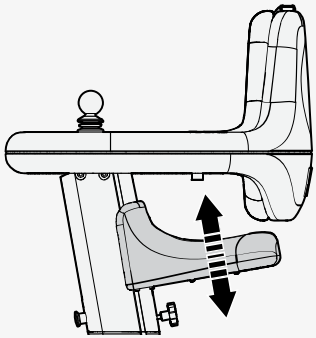

3.3.2 Table and backrest unit

The table and backrest are combined to one unit. This unit provides ergonomic positions for sitting and standing. The height of the table and backrest unit can be changed to ten different positions.

For instructions on adjustments of the table and backrest unit, see 4 *Adjustments*.

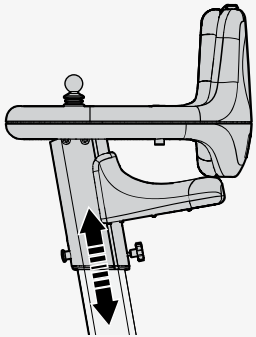

3.3.2.1 Tray top

The tray top covers the table and is attached with magnets. You can remove it to access the functions of the control panel, and to clean areas which easily become dirty.

For instructions on removing the tray top, see 4 *Adjustments*.

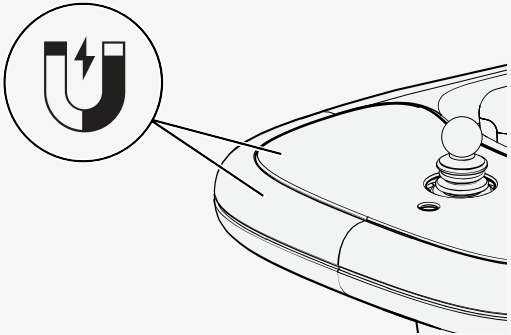

3.3.2.2 Cushion

The cushion is attached to the backrest from the start and is intended to provide support to small children. It can be removed and attached as needed.

For instructions on removing the cushion, see 4 *Adjustments*.

3.3.3 Base module

The base module has functions for power supply and drive units. The drive units are positioned inside the base module. Each drive wheel is equipped with a drive unit that has an electric motor and a gearbox.

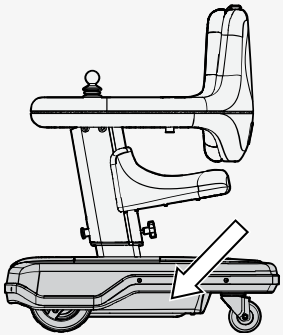

3.3.3.1 Main circuit breaker

The main circuit breaker is used to turn on and off the main power. It is positioned on the right side of the base module, below the start button. It also functions as a fuse, and the Explorer Mini will automatically be turned off if an electrical fault occurs. This means that the control system is protected from being overloaded, for example if the child keeps driving the Explorer Mini while the wheelchair is stuck.

For instructions on how to turn on and off the main power, see 5 *Handling and driving*.

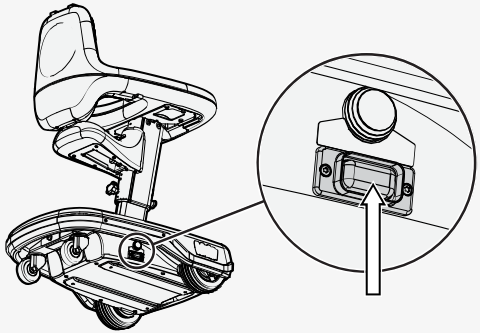

NOTICE Before turning off the main circuit breaker

NOTICE Investigate tripped main circuit breaker

3.3.3.2 Start button

The start button is positioned on the right side of the base module, above the main circuit breaker.

For instructions on how to use the start button, see 5 *Handling and driving*.

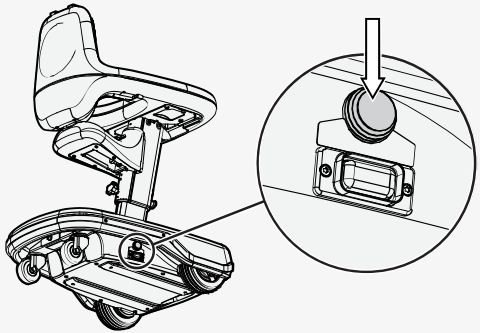

3.3.3.3 Batteries

The batteries are positioned inside the base module.

For instructions on how to charge the batteries, see 5 *Handling and driving*.

WARNING! Do not replace batteries

3.3.3.4 Wheels

The caster wheels and drive wheels have solid tires and are not inflatable.

3.4 Control panel

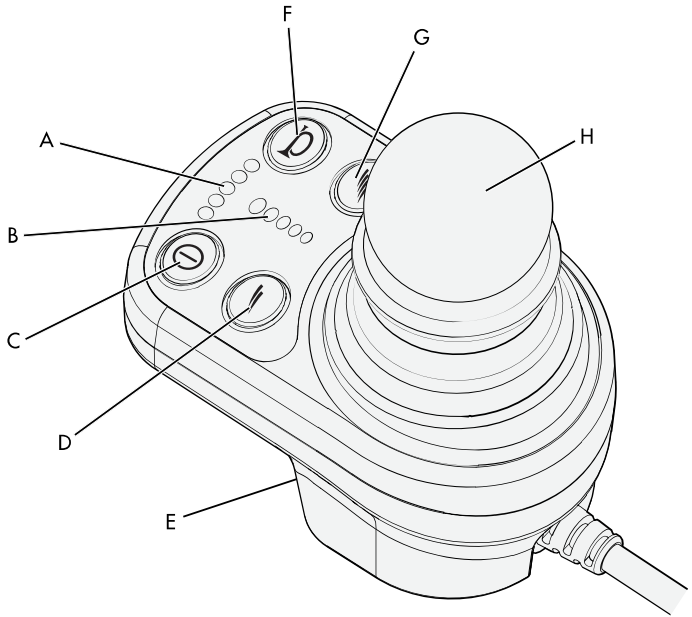

A. Battery indicator
B. Maximum speed indicator
C. On/off button
D. Reduce speed
E. Charger socket
F. Horn button
G. Increase speed
H. Joystick

The control panel has functions for driving, and charging the batteries. It has a joystick, function buttons, indicators for speed, a battery charger, and a charger socket. The charger socket is positioned at the front of the control panel. The on/off button on the control panel is always accessible. To access the other function buttons on the control panel, you need to remove the tray top. This is to prevent that the child gets access to the control panel and to prevent that the child gets distracted by the LEDs.

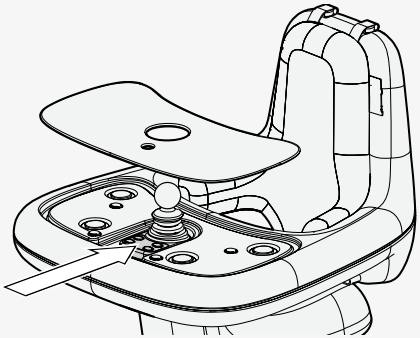

3.4.1 Charger socket

Only use the charger socket to charge the batteries of the Explorer Mini. While the Explorer Mini charges, it is automatically locked and cannot be driven.

NOTICE Only use supplied battery charger

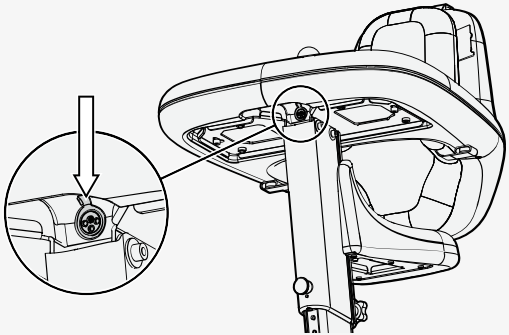

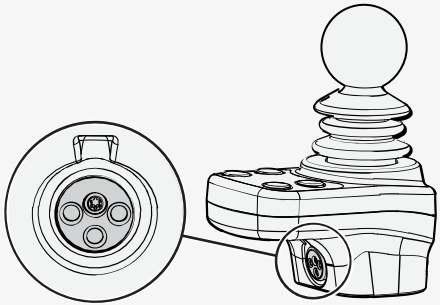

3.4.2 On/off button

The on/off button activates the control panel and drive units.

When the control panel is activated, you can drive the Explorer Mini and use all the functions on the control panel.

When the control panel is off, the Explorer Mini cannot be driven and the functions of the control panel cannot be used.

3.4.3 Maximum speed buttons

The maximum speed buttons increase and reduce the maximum speed of the Explorer Mini.

3.4.4 Maximum speed indicator

The maximum speed indicator has five settings. The LEDs on the speed indicator show the current maximum speed setting:

- When the fifth LED (A) is lit, the maximum setting is active.
- When the third LED (B) is lit, the medium setting is active.
- When the first LED (C) is lit, the minimum setting is active.

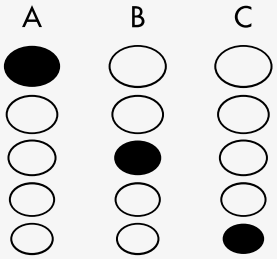

3.4.5 Horn button

Press the horn button to make the horn sound.

3.4.6 Battery indicator

The battery indicator gives an approximate indication if the batteries need to be charged to prevent unnecessary stops because of discharged batteries. The LEDs on the battery indicator show the battery status:

- When the batteries are fully charged, the red LED (Ⓐ), yellow LEDs (Ⓑ), and green LEDs (Ⓒ) are lit.
- When the battery level is critically low, the red LED (Ⓐ) flashes and a beep sounds. This means that you have to charge the batteries immediately to prevent that the Explorer Mini stops working.
- If all LEDs (Ⓐ, Ⓑ, and Ⓒ) flash, there is a problem with the electronics. Please contact your service provider or Permobil.

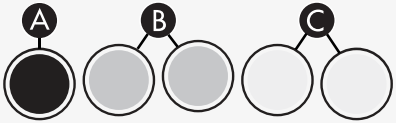

3.4.7 Joystick

The joystick is used to control the Explorer Mini. The neutral position is in the center. Always put the joystick in the neutral position before you turn on or off your child's wheelchair. This prevents joystick errors.

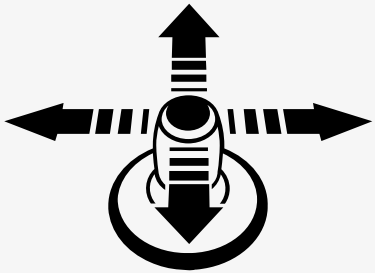

3.5 Accessories

Only use accessories intended to be used with the Explorer Mini. You can order them from your Permobil dealer. Accessories for Permobil products are in continuous development. Contact your Permobil dealer for more information about the accessories available for the Explorer Mini.

WARNING! Be careful with new accessories

3.5.1 Sticker kit

A sticker kit with self-adhesive pictures is supplied with the Explorer Mini. You and your child can use these pictures to decorate the Explorer Mini.

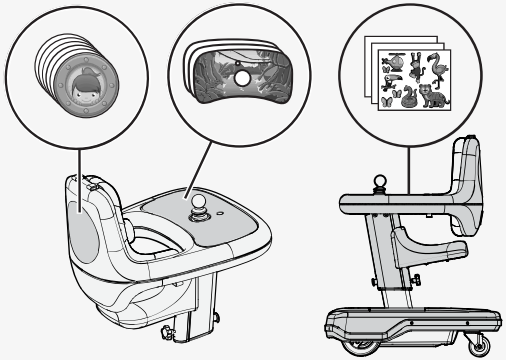

3.6 Labels

Take a good look at all the labels on the wheelchair and get acquainted with their meaning. The labels contain important information for safe and proper use.

WARNING! Accident risk – Always replace missing labels

3.6.1 Serial number label on the base module

The serial number label is attached between the caster wheels on the base module.

Description of the fields on the serial number label:

A. SN Serial number of the wheelchair
B. Maximum user weight
C. Model: Model
D. Name and address of the manufacturer
E. YYYY-MM-DD: Date of manufacture
F. CE mark
MD Medical device
℞ Prescription only
G. Unique Device Identification (UDI) as a GS1 DataMatrix and human readable format including: GTIN - global trade item number, date of manufacture, and serial number

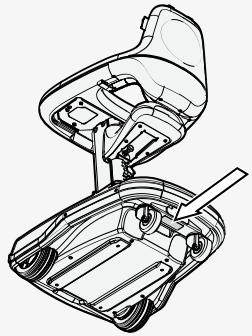

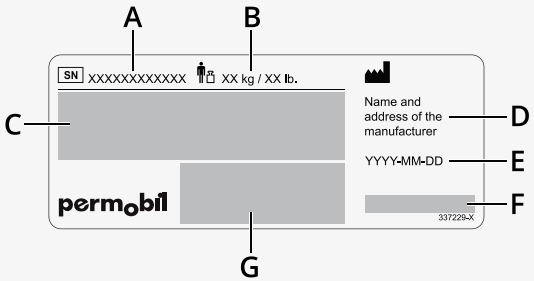

3.6.2 Read the instructions

This label indicates that there are instructions that must be read and understood before use or adjustment.

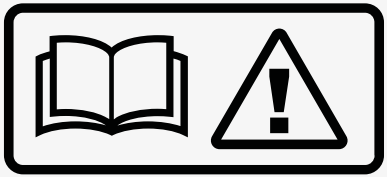

3.6.3 Pinch risk

This label shows that there is a pinch risk when you adjust the height of the seat and the table and backrest unit.

3.6.4 Driving restrictions

This label shows restrictions for driving.

A. Explorer Mini must not be used as a seat in a motor vehicle.

B. The maximum safe slope for hill-climbing is 3°.

C. The maximum height for obstacle climbing is 12 mm (0.5”).

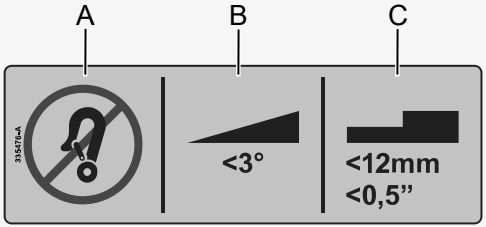

3.6.5 Main circuit breaker and start button

The label shows the positions to turn on and off the main circuit breaker, and the position of the start button.

3.6.6 Wiring diagram

The label shows wiring diagram for the batteries and fuses. It includes the battery polarities, the main fuse, and the position of the activation switch.

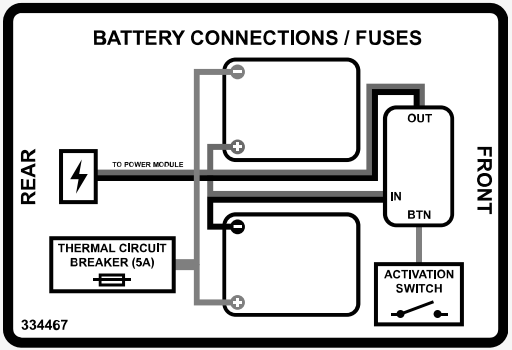

3.6.7 Electromagnetic interference

A tag with information about electromagnetic interference (EMI) hangs on the Explorer Mini.

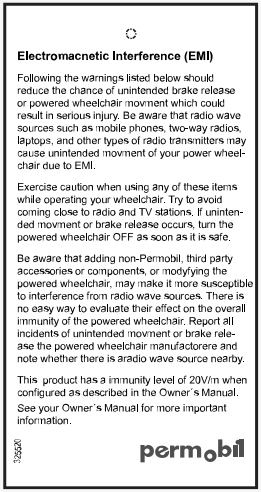

Electromacnetic Interference (EMI)

Following the warnings listed below should reduce the chance of unintended brake release or powered wheelchair movment which could result in serious injury. Be aware that radio wave sources such as mobile phones, two-way radios, laptops, and other types of radio transmitters may cause unintended movment of your power wheelchair due to EMI.

Exercise caution when using any of these items while operating your wheelchair. Try to avoid coming close to radio and TV stations. If unintended movment or brake release occurs, turn the powered wheelchair OFF as soon as it is safe.

Be aware that adding non-Permobil, third party accessories or components, or modyfying the powered wheelchair, may make it more susceptible to interference from radio wave sources. There is no easy way to evaluate their effect on the overall immunity of the powered wheelchair. Report all incidents of unintended movment or brake release the powered wheelchair manufactorere and note whether there is aradio wave source nearby.

This product has a immunity level of 20V/m when configured as described in the Owner´s Manual.

See your Owner´s Manual for more important information.

4 Adjustments

Any adjustments on the Explorer Mini should be done by an adult. Only do adjustments that are described in this user manual. All other maintenance and repairs must be done by qualified service technicians. Carefully read all instructions before doing adjustments and maintenance.

Make sure that all settings are adapted to the child's needs. An adult or healthcare provider must decide which settings are applicable for the child, taking into consideration his or her age and capacity.

Make sure that the Explorer Mini is turned off before you do adjustments. For instructions on how to turn off the Explorer Mini, see 5 *Handling and driving*.

WARNING! Do not adjust while the child is in the wheelchair

4.1 Seat

4.1.1 Adjusting the seat height

The seat height is dependent on the height of the table and backrest unit. When the height of the table and backrest unit is adjusted, the distance between the seat and the base module is also changed.

The center of gravity changes when you change the position of the seat. When you raise the seat, you decrease the wheelchair's stability.

Use the plunger knob located under the seat to adjust the seat height.

CAUTION! Pinch risk

1. Pull out the plunger knob (Ⓐ) located under the seat.
2. Carefully move the seat up or down to the new setting.
3. Release the plunger knob (Ⓐ). A click signals that the plunger knob is locked.

WARNING! Risk of injury

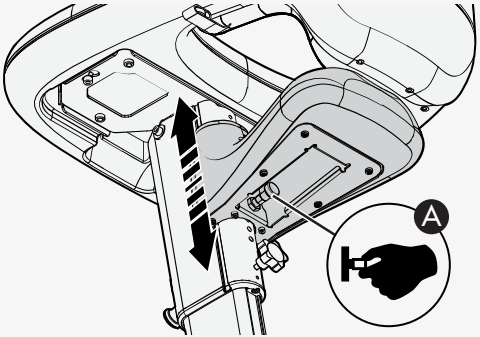

4.1.2 Removing the seat

An adult or healthcare provider must decide if seat removal is applicable for the child, taking into consideration his or her age and capacity.

The center of gravity is affected when the seat is removed.

The table and backrest unit must be in the highest position before you can remove the seat. Otherwise there will not be enough space to remove the seat.

1. Put the table and backrest unit in its highest position. For instructions on how to adjust the height of the table and backrest, see 4.2.1 *Adjusting the height of the table and backrest unit*.

2. Remove the tightening knob (Ⓐ) from the column.
3. Pull out the plunger knob (Ⓑ).

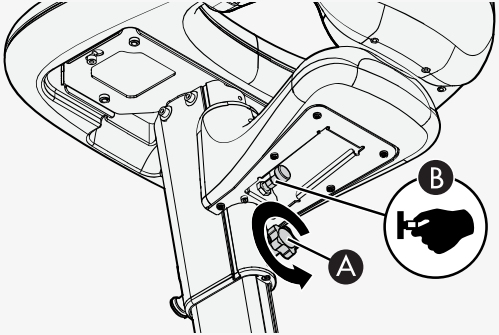

4. Push down the seat and slide it off the column.

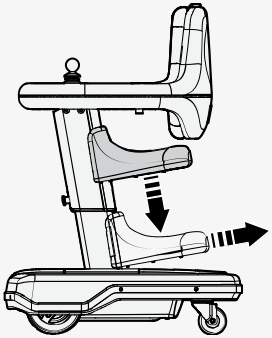

5. Put back the tightening knob and tighten it by hand.

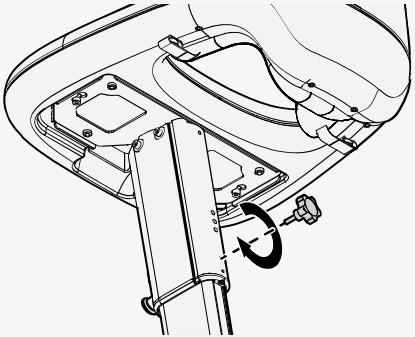

4.1.3 Installing the seat

The center of gravity is affected when the seat is installed.

The table and backrest unit must be in the highest position before you can install the seat. Otherwise there will not be enough space to install the seat.

1. Put the table and backrest unit in its highest position. For instructions on how to adjust the height of the table and backrest unit, see 4.2.1 *Adjusting the height of the table and backrest unit*.

2. Remove the tightening knob from the column.

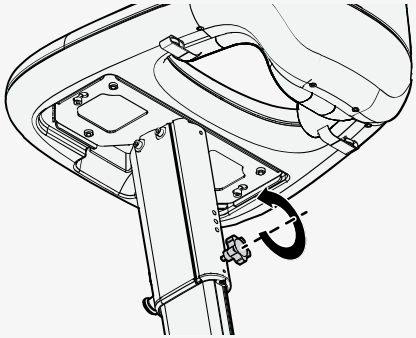

3. Pull out the plunger knob (Ⓐ).

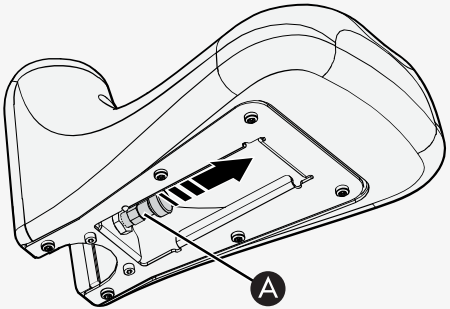

4. Push the seat into the groove on the column.
5. Carefully move the seat up or down to a setting.

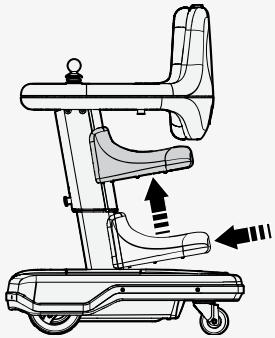

6. Release the plunger knob (Ⓐ). A click signals that the plunger knob is locked.
7. Put back the tightening knob (Ⓑ) and tighten it by hand.

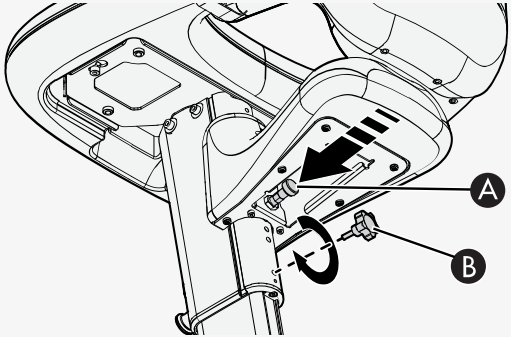

4.2 Table and backrest unit

When the height of the table and backrest unit is adjusted, it affects the distance between the seat and the base module.

The center of gravity changes when you change the position of the table and backrest unit. When you raise the table and backrest unit, you decrease the wheelchair's stability.

CAUTION! Pinch risk

4.2.1 Adjusting the height of the table and backrest unit

1. Loosen the tightening knob (Ⓐ).
2. Hold the table in its position (Ⓑ) to prevent it from sliding down on the base module.
3. While you hold the table in its current position, pull out the plunger knob (Ⓒ).
4. While you continue to pull the plunger knob (Ⓒ), move the column up or down to the new setting.
5. Release the plunger knob (Ⓒ). A click signals that the plunger knob (Ⓒ) is locked.
6. Tighten the tightening knob (Ⓐ) by hand.

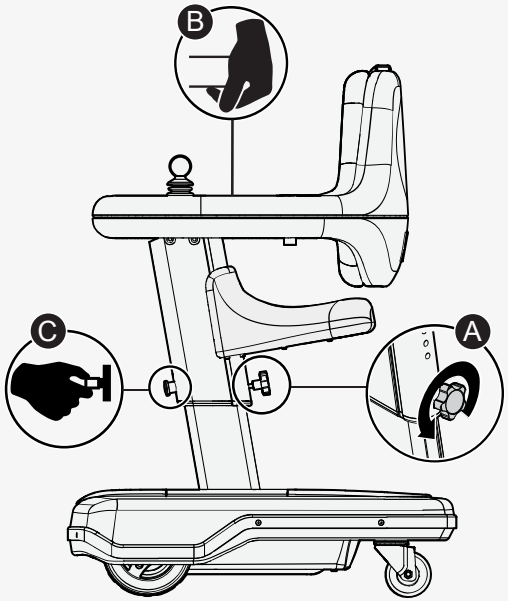

4.3 Tray top

4.3.1 Removing the tray top

Put your fingers in the hole that is positioned at the bottom of the table. Push the tray top upward and lift off the tray top.

NOTICE Do not drive the wheelchair while the tray top is removed

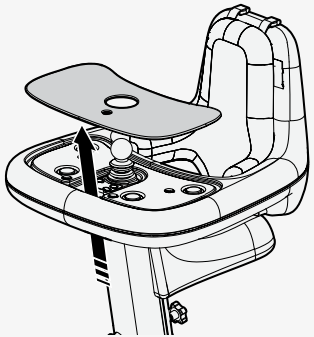

4.3.2 Attaching the tray top

Hold the tray top with its metal inserts facing downward. Put the tray top on the table.

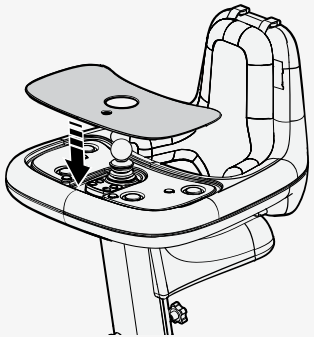

4.4 Cushion

4.4.1 Removing the cushion

The wheelchair has a removable cushion. There are four screws, attached to the cushion, that hold the cushion in place.

1. Remove the four screws from the attachment points on the backrest.
2. Remove the cushion from the backrest.

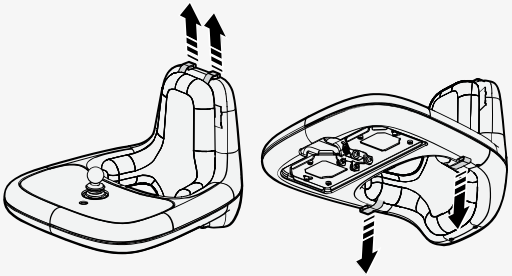

4.4.2 Attaching the cushion

1. Put the cushion in place on the backrest.
2. Put the four screws into the attachment points on the backrest and tighten them by hand.

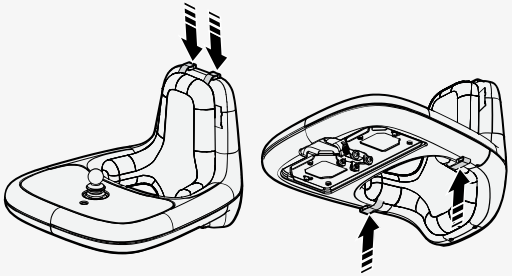

5 Handling and driving

The Explorer Mini is intended to be used indoors on dry, flat, firm, and clean surfaces and outdoors in dry weather on dry, paved, and flat surfaces.

WARNING! Do not let a child use the Explorer Mini alone

WARNING! Prevent accidental movement

WARNING! Passengers are not permitted

WARNING! Adapt the driving position to the child's needs

5.1 Positions for driving

The Explorer Mini can be used sitting or standing.

5.1.1 Sitting position

When the Explorer Mini is used in the sitting position, the child sits with one leg on each side of the column. The feet should touch the friction surface of the base module. The arms should be positioned on the table, to make sure that he or she can reach the joystick easily.

When you put the child in the Explorer Mini, the attached cushion can come out of position. Adjust the cushion if necessary.

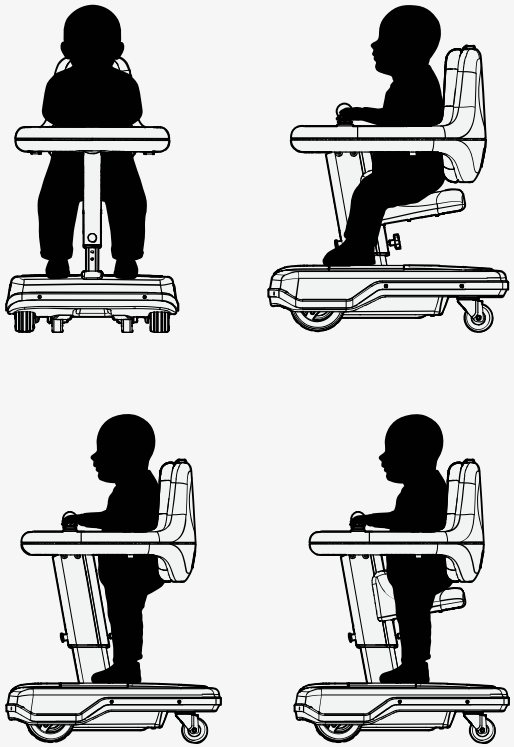

5.1.2 Standing position

When the Explorer Mini is used in the standing position, the child's feet should be positioned on the friction surface of the base module. The arms should be positioned on the table, to make sure that he or she can reach the joystick easily.

If needed, the seat can be removed before the Explorer Mini is used in the standing position. An adult or healthcare provider must decide if seat removal is applicable for the child, taking into consideration his or her age and capacity.

5.2 Turning on the Explorer Mini

You must turn on the main circuit breaker and press the start button before you activate the control panel. There is no feedback to confirm that you have pressed the start button.

1. Turn on the main circuit breaker (Ⓐ).
2. Press and hold the start button (Ⓑ) for at least one second.
3. Press the on/off button (Ⓒ). A beep sounds to confirm that the control panel is activated.

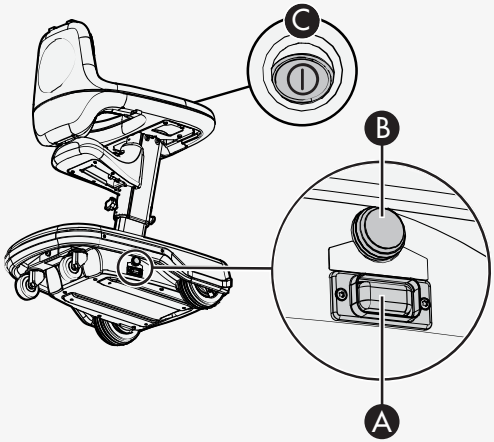

5.3 Turning off the Explorer Mini

If you are unsure whether the Explorer Mini is turned on or off, remove the tray top to see if the LEDs on the control panel are on or off.

1. Press the on/off button (Ⓐ) to turn off the power.
2. Remove the tray top and make sure that the LEDs on the control panel are off.
3. If the Explorer Mini is going to be stored for a week or more, turn off the main circuit breaker (Ⓑ).

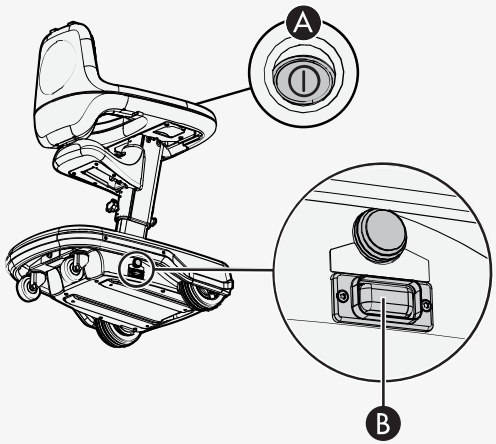

5.4 Battery saving function

The battery saving function starts automatically when the Explorer Mini has not been in use for ninety minutes. When this occurs, you have to press the start button for at least one second before you activate the control panel again.

To start the Explorer Mini again:

1. Press and hold the start button (Ⓐ) for at least one second.
2. Press the on/off button (Ⓑ). A beep sounds to confirm that the control panel is activated.

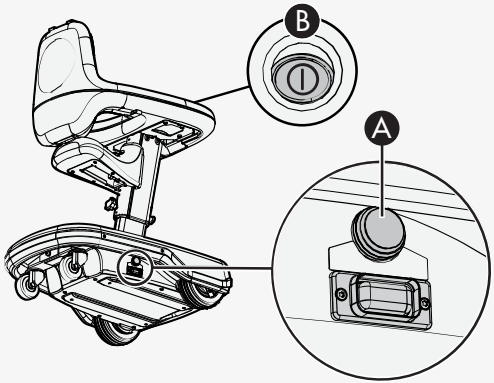

5.5 Driving technique

CAUTION! Do a test of functions and settings

WARNING! Obstacles at head level

WARNING! Risk of tipping when driving backward

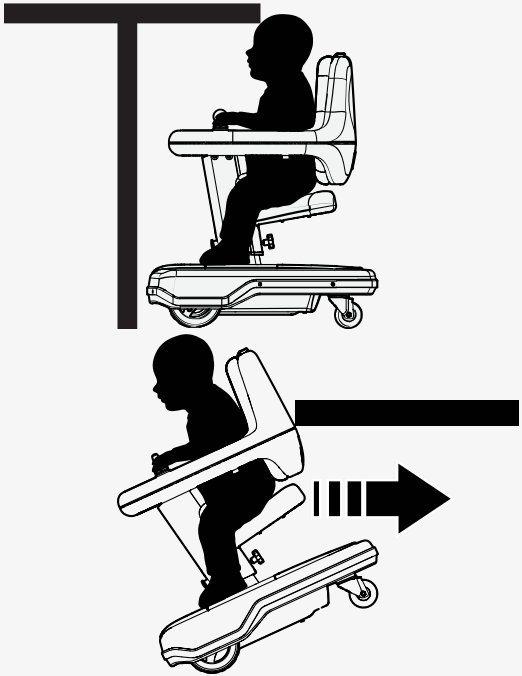

WARNING! Do not use the joystick as a support

1. Place your child in the Explorer Mini.
2. Turn on the Explorer Mini.
3. Show your child that the wheelchair moves in the direction he or she pushes the joystick.
4. Show your child that the wheelchair brakes or stops when he or she releases the joystick. The joystick will move to its neutral position.

Please note that the back of the Explorer Mini drifts when it turns.

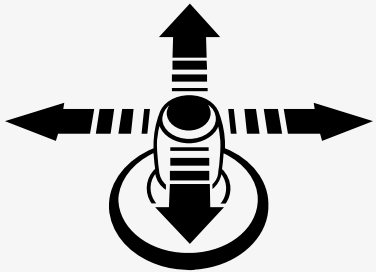

5.6 Adjusting the maximum speed setting

WARNING! Adapt the speed to the child's needs

CAUTION! Driving in narrow spaces

1. Make sure that the Explorer Mini is turned on.
2. Remove the tray top to get access to the maximum speed buttons.
3. Use the maximum speed buttons to increase or reduce the maximum speed:
   - To increase the maximum speed, press the right maximum speed button.
   - To reduce the maximum speed, press the left maximum speed button.

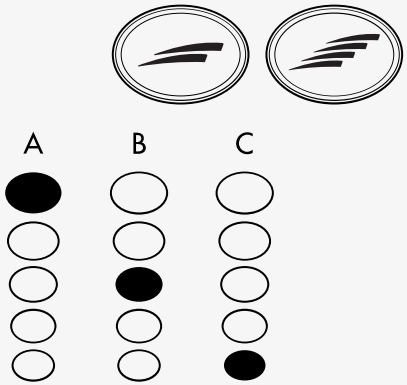

5.7 Locking and unlocking the Explorer Mini

The Explorer Mini can be locked to prevent other users from driving it. When the Explorer Mini is locked it cannot be driven before it is unlocked again. An adult must lock or unlock the wheelchair.

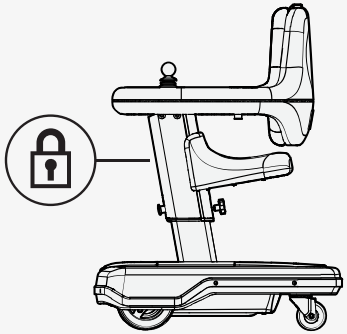

5.7.1 Locking

The Explorer Mini is unlocked with the steps below. Step 3 and 4 must be done swiftly, otherwise the procedure gets interrupted and you must start again from step 1.

1. Make sure that the Explorer Mini is turned on.
2. Press and hold the on/off button for one second until a beep sounds.
3. Push the joystick forward until a beep sounds.
4. Pull the joystick backward until a beep sounds.
5. Release the joystick. A beep sounds and the Explorer Mini is locked for driving.

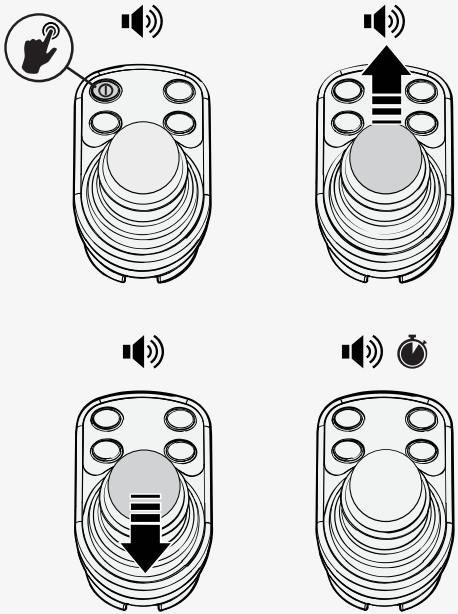

5.7.2 Unlocking

The Explorer Mini is unlocked with the steps below. Step 4 and 5 must be done swiftly, otherwise the procedure gets interrupted and you must start again from step 2.

1. Remove the tray top.
2. Make sure that the Explorer Mini is turned on.
3. The LEDs of the maximum speed indicator will flash repeatedly.
4. Push the joystick forward until a beep sounds.
5. Pull the joystick backward until a beep sounds.
6. Release the joystick. A beep sounds and the Explorer Mini is unlocked and can be driven.

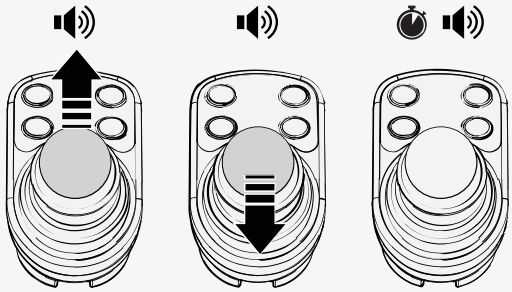

5.8 Driving restrictions

Make sure to follow the driving restrictions for safe and proper use of the Explorer Mini. The driving restrictions describes the safest, recommended conditions for driving the Explorer Mini in sitting or standing position when the user environment differs from dry, flat, firm, and clean surfaces.

WARNING! Do not use the Explorer Mini in moist conditions or rain

WARNING! Dangerous environment

WARNING! Tipping risk

5.8.1 Driving restrictions for different surfaces

Do not drive at high speed, avoid sudden stops and starts, sudden evasive maneuvers, and sharp turns. Be careful in the following situations:

- when near edges and drops or on elevated surfaces,
- when on soft or uneven surfaces such as carpet,
- when driving from an area of high traction (for example flooring) to an area of low traction (for example carpet),
- when turning the wheelchair,
- when in narrow or confined spaces, and
- when driving on surfaces that have ridges that could cause the wheelchair to move in a different direction.
- when in outdoor areas where there is an increased risk of injury (for example close to traffic).

Protect the wheelchair from all types of moisture, including rain, snow, mud, and spray. If the wheelchair has been exposed to moisture, do not drive it until it has dried completely.

CAUTION! Do not use the Explorer Mini on dirty ground

5.8.2 Driving over obstacles

The Explorer Mini can climb obstacles up to 12.5 mm (0.5″).

WARNING! Driving — high obstacles

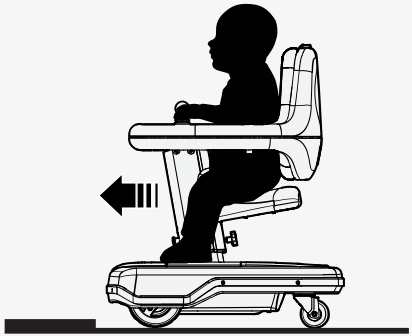

5.8.3 Driving on side slopes

Make sure that the maximum speed is set to a speed that your child can handle and that the slope is not steeper than 6°, which means a slight slope, for example a threshold ramp.

WARNING! Risk of tipping on steep slopes

WARNING! Risk of tipping on uneven surfaces

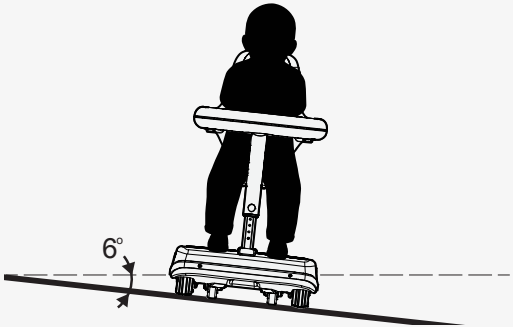

5.8.4 Driving downhill

The stopping distance increases when your child drives downhill. Make sure that the maximum speed is set to a speed that your child can handle and that the downhill gradient is not greater than 6°, which corresponds to for example a threshold ramp.

WARNING! Risk of tipping when driving downhill

WARNING! Risk of tipping on uneven surfaces

WARNING! Increased stopping distances

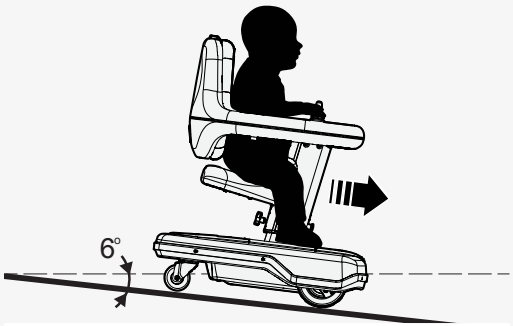

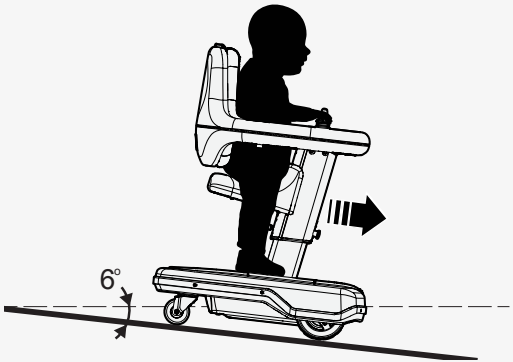

5.8.5 Driving uphill

Make sure that the maximum speed is set to a speed that your child can handle and that the uphill gradient is not greater than 6°, which corresponds to for example a threshold ramp.

WARNING! Risk of tipping when driving uphill

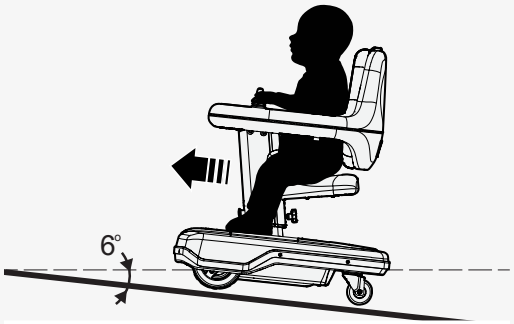

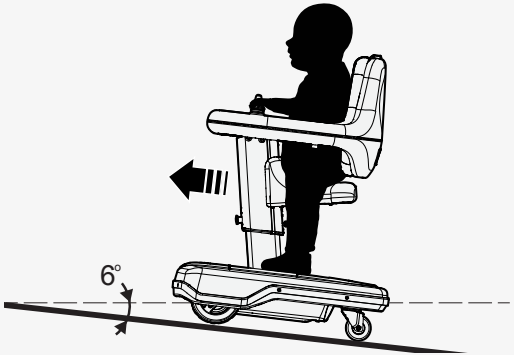

5.8.6 Driving statically against obstacles

If the Explorer Mini drives statically against an obstacle, the drive wheels cannot turn. The wheelchair will be turned off automatically to protect it from being overloaded.

Move the Explorer Mini from the obstacle before you turn on the wheelchair again.

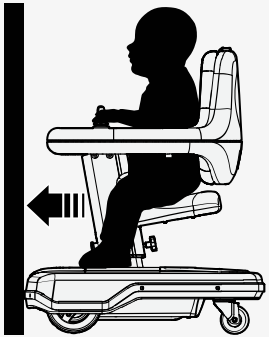

5.9 Joystick error when the Explorer Mini is turned on

A joystick error can occur if the joystick is moved from its neutral position immediately before, during, or immediately after the Explorer Mini is turned on.

To prevent joystick errors when the Explorer Mini is turned on, make sure that the joystick is in the neutral position. Press the on/off button and wait until the control panel has been active for a few seconds before you move the joystick.

5.10 Joystick error and flashing LEDs

If an electrical fault occurs in the control panel, the LEDs on the battery indicator will flash quickly and the joystick will not work properly. The Explorer Mini needs to be turned off and then on again.

To start the Explorer Mini:

1. Make sure that the joystick is in the neutral position.
2. Press the on/off button to turn off the control panel.
3. Remove the tray top to make sure that the LEDs on the control panel are off.
4. Press the on/off button to turn on the control panel again.

   If the LEDs on the battery indicator still flash quickly, contact your service provider for support.

5.11 Electrical fault

The main circuit breaker also functions as a fuse, and the Explorer Mini will automatically be turned off if an electrical fault occurs. If this happens you can try to turn on the Explorer Mini again.

If the Explorer Mini is overloaded because of high power consumption, the main circuit breaker may be tripped, and a major electrical fault may be the cause. Carefully investigate the cause before you start the Explorer Mini again.

If you cannot turn on the Explorer Mini again, contact your service provider for support.

5.12 Batteries

How often the batteries need to be charged depends on several things, for example how you use the Explorer Mini, the ambient temperature, and how old the batteries are.

Batteries lose capacity as they age. The length of their service life is affected by three things: how much power that is left in them before they are charged, how often they are charged, and how often they become completely discharged.

A good rule of thumb is to charge the batteries at the end of each day to prevent that they become completely discharged. You can charge the Explorer Mini when it is not in use.

WARNING! Do not replace batteries

WARNING! Only use supplied battery charger

WARNING! Charging conditions to avoid the risk of fire or explosion

WARNING! Risk for overheating, sparks or short-circuit

WARNING! Do not charge the Explorer Mini outdoors

CAUTION! Only use supplied cable to charger socket

NOTICE Discharged batteries

NOTICE Do not use an extension cable

5.12.1 Charging the batteries

The Explorer Mini must only be charged with the supplied battery charger in a dry room with good ventilation. There is a green LED on he battery charger that is lit when the battery is fully charged. Read the user manual supplied with the battery charger.

While the Explorer Mini charges, it is automatically locked and cannot be driven. The LEDs on the battery indicator show the battery status. For information on the battery status, see 3.4.6 *Battery indicator*.

If an error occurs when you charge the Explorer Mini, use the trouble shooting guide for remedies. See 7 *Troubleshooting*.

CAUTION! Sharp edges on cable

NOTICE Prevent sunlight

NOTICE Automatically locked for driving

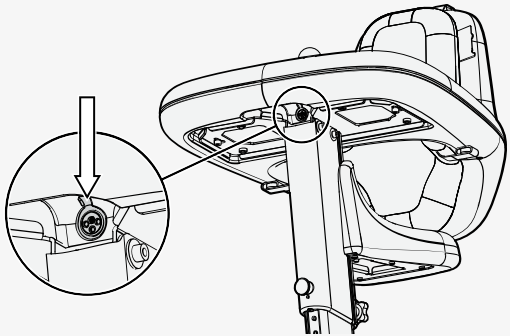

1. Press the on/off button to turn off the power.
2. Connect the charging connector to the charging socket of the Explorer Mini.
3. Connect the charger contact to the wall socket.
4. Charge the batteries.
5. Disconnect the charger contact from the wall socket.
6. Disconnect the charging connector from the charging socket of the Explorer Mini.

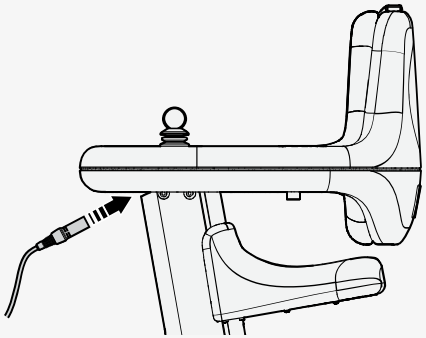

5.13 Transporting the wheelchair

DANGER! Do not use the Explorer Mini as a seat in a motor vehicle

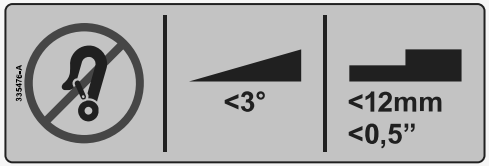

The Explorer Mini must only be transported in vehicles equipped with tie-down points and a cargo barrier. You need straps to attach the Explorer Mini in the vehicle.

You can tilt the Explorer Mini sideways to get it into the vehicle, but transport the Explorer Mini in an upright position. Do not disassemble the Explorer Mini.

1. Adjust the table and backrest unit to its lowest position.

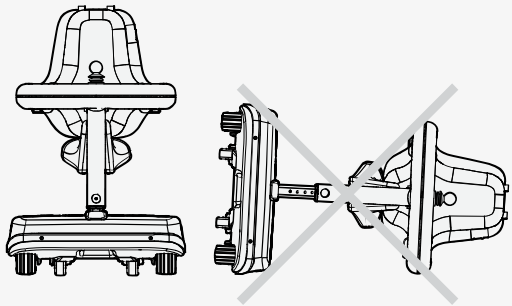

2. Lift the Explorer Mini by the handgrips at the front and back of the base module.

3. Put the Explorer Mini in an upright position in the middle and to the front of the luggage compartment.
4. Attach the straps to the tie-down points.

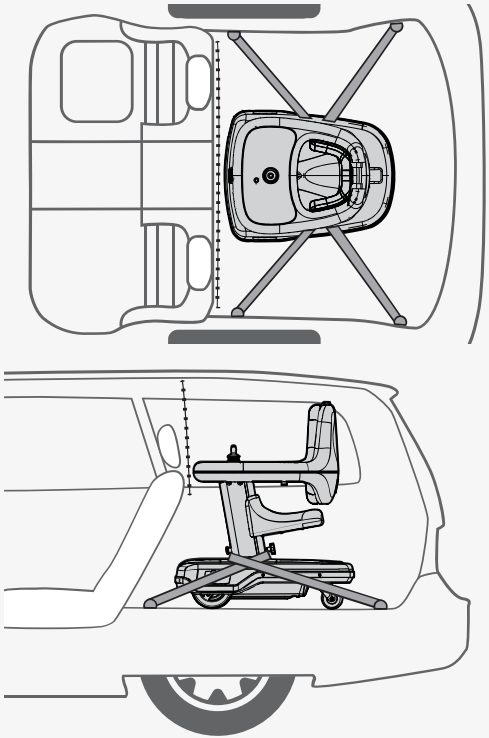

5. Make sure that the wheelchair is properly secured.

CAUTION! Damage during transportation

5.13.1 Preparations for air transportation

The main circuit breaker must always be turned off before transportation.

Airlines have different rules regarding wheelchair transportation. Please contact your specific airline for more information and to make sure the wheelchair can be transported safely.

5.13.1.1 Batteries

The Explorer Mini is equipped with spill-proof batteries. The batteries are securely attached inside the base module and they meet the requirements of Packing Instruction 872 of special provision A67, meaning they are approved for air transport.

5.13.1.2 Dimensions and weight

Weight and dimensions of the wheelchair are important depending on the size and type of aircraft that will be used for the transportation. Always ask the airline about regulations for permitted weight and dimensions of the wheelchair. For information on weight and dimensions of the Explorer Mini, see 3.2.1 *Dimensions and weight*.

5.13.1.3 Preparing the wheelchair for transportation

It is important to prevent damage to the wheelchair during transportation. Follow the instructions below to prepare the wheelchair for transportation:

1. Adjust the column to its lowest position.
2. Cover the control panel with a soft, shock-absorbing material.
3. Cover any other objects that protrude.

6 Maintenance and repairs

Regular maintenance and correct handling are important to make sure that the Explorer Mini operates well.

CAUTION! Maintenance by a qualified service technician

6.1 Maintenance and inspection schedule

Follow the recommendations in the maintenance and inspection schedule. Contact your dealer for all service-related needs or questions, including packing and shipping instructions. Replacement units are not available when the Explorer Mini is serviced or repaired.

Maintenance and inspection schedule	Daily	Weekly	Monthly
Do a check of the battery level indication and charge the battery if necessary.	X		
Make sure that the joystick and the control panel are not damaged.	X		
Clean the table, the seat, and the groove on the table if necessary. Please note that you need to remove the tray top to clean the groove on the table.	X		
Clean the wheelchair and the cushion.		X	
Do a check of wear on the cushion.			X
Do a check to find loose parts. If you find a loose part, contact your dealer.			X

6.2 Batteries and storage

Do not store the Explorer Mini in areas with condensation and moisture on the surfaces, for example laundry rooms.

6.2.1 Short-term storage

For short-term storage of the batteries, the room must be at least 5°C (41°F). If the temperature is lower, the batteries might not charge fully and can be more exposed to corrosion.

6.2.2 Long-term storage

It is not necessary to heat the room where the batteries are stored long-term, but to prevent corrosion to the batteries, it is recommended to keep the room a few degrees warmer than outdoors. This will keep the room drier.

Batteries that are kept for long-term storage must be charged every six months.

Always store the Explorer Mini in an upright position. Do not put heavy objects on the wheelchair. The plastic parts on the Explorer Mini can be damaged if they are exposed to mechanical forces during the long-term storage.

Follow the instructions below to prepare the wheelchair for long-term storage:

- Make sure that the batteries are fully charged before the long-term storage.
- Turn off the main circuit breaker to prevent that the batteries become completely discharged.

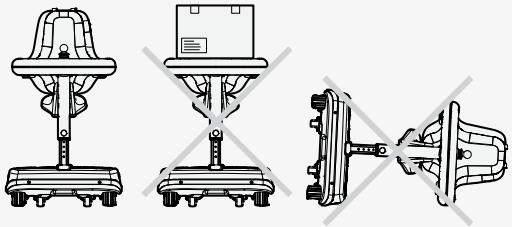

6.3 Cleaning

Regular care and maintenance will prevent unnecessary wear to the Explorer Mini. If the Explorer Mini belongs to more than one child, we recommend that you do the cleaning procedure after each child has used the wheelchair.

Do not use solvents or abrasive kitchen cleaners.

Only use the cleaning methods described in this user manual. If the cushion is very dirty or if the surface finish is damaged, contact Permobil for information.

6.3.1 Control panel

Do not rinse the control panel with water or other fluid. It is important that no fluid gets into the control panel. If fluid gets into the control panel, it can cause damage to the electronics.

1. Press the on/off button to turn off the power.
2. Remove the tray top to access the control panel.
3. Clean the control panel with a soft, damp cloth and a mild detergent.
4. Wipe the control panel with a soft dry cloth.

6.3.2 Plastic and metal surfaces

Do a daily check to see if the table and seat are dirty. Also do a check to see if the groove on the table is dirty. Please note that you need to remove the tray top to clean the groove on the table.

The metal surfaces on the Explorer Mini are corrosion resistant.

1. Press the on/off button to turn off the power.
2. Clean the plastic and metal surfaces with a soft cloth, a mild detergent, and hot water.
3. Wipe the plastic and metal surfaces with a soft dry cloth.

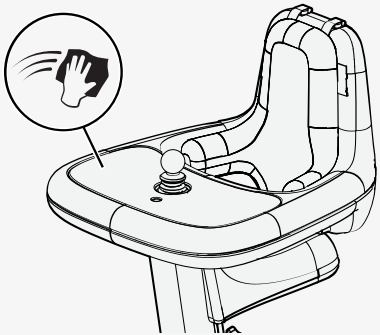

6.3.3 Cushion cover

1. Press the on/off button to turn off the power.
2. Remove the cushion from the Explorer Mini. For instructions, see 4.4.1 *Removing the cushion*.
3. Remove the cover from the cushion.
4. Turn the cover inside out and follow the cleaning instructions on the label. Use a washing bag to prevent that the screws damage your washing machine.
5. Put back the cover on the cushion.
6. Attach the cushion on the Explorer Mini. For instructions, see 4.4.2 *Attaching the cushion*.

7 Troubleshooting

This troubleshooting guide describes the most common events that can occur when you use the Explorer Mini. It also describes possible causes and remedies. This troubleshooting guide is not exhaustive.

Contact your service provider or Permobil if you need service. For contact information, see 1.4 *Technical support*.

NOTICE Unapproved replacement of parts

Event	Possible cause	Remedy
The Explorer Mini does not start.	The batteries are discharged.	Charge the batteries. For instructions, see 5.12.1 *Charging the batteries*.
	The battery saving function has started.	Press and hold the start button for at least one second. For instructions, see 5.4 *Battery saving function*.
	Explorer Mini is turned off. The main circuit breaker is turned off or tripped.	Reset the main circuit breaker and press and hold the start button for at least one second. For instructions, see 5.2 *Turning on the Explorer Mini*.
	The main circuit breaker is turned on, but the start button has not been pressed.	Press and hold the start button for at least one second. For instructions, see 5.2 *Turning on the Explorer Mini*.
The Explorer Mini cannot be driven.	The battery charger is connected.	Stop the charging procedure and disconnect the charger cable from the charger socket on the Explorer Mini.
	The Explorer Mini is locked.	Unlock the wheelchair. For instructions, see 5.7.2 *Unlocking*.
The Explorer Mini will automatically be turned off after a period (90 minutes) of inactivity.	The battery saving function has been started.	Press and hold the start button for at least one second. For instructions, see 5.4 *Battery saving function*.
The Explorer Mini stops during driving.	The main circuit breaker is tripped.	Reset the main circuit breaker. For instructions, see 5.2 *Turning on the Explorer Mini*.
	The batteries are discharged.	Charge the batteries. For instructions, see 5.12.1 *Charging the batteries*.

Event	Possible cause	Remedy
The Explorer Mini cannot be charged.	The main circuit breaker is turned off.	Turn on the main circuit breaker and press and hold the start button for at least one second. For instructions, see 5.2 *Turning on the Explorer Mini*.
	The main circuit breaker is turned on, but the start button is not pressed.	Press and hold the start button for at least one second. For instructions, see 5.2 *Turning on the Explorer Mini*.
	Either an incorrect battery charger is used or the battery charger is damaged.	Make sure that you use the battery charger that was supplied with the Explorer Mini. If it still is not possible to charge, contact your service provider or Permobil.
The main circuit breaker cannot be turned on.	Electrical fault.	Contact your service provider or Permobil.

8 Electromagnetic compatibility

The Explorer Mini complies with the limit values of harmonized standards for the EU (European Union), in the Medical Device Regulation (EU) 2017/745.

The Explorer Mini has not been tested for immunity in standing position. The only difference between the sitting and standing position is the height of the seat and the height of the table and backrest unit, which is considered to have no or insignificant effect on the immunity of radio frequency fields, electrostatic discharges and/or magnetic fields. This means that the Explorer Mini is considered to pass the test in standing position.

Additional data regarding electromagnetic immunity and recommended separation distance is in the Explorer Mini product data sheet.

8.1 Electromagnetic emissions

Guidance and manufacturer‘s declaration

The Explorer Mini and the battery charger (PF2401A5SL) are intended for use in the electromagnetic environment specified below. The customer or the user of the Explorer Mini and the battery charger (PF2401A5SL) should ensure that they are used in such an environment.

Emissions test	**Compliance**		**Electromagnetic environment guidance**
	Explorer Mini	**Battery charger (PF2401A5SL)**	
RF emissions CISPR 11	Group 1	Group 1	The Explorer Mini and the battery charger (PF2401A5SL) use RF energy only for their internal functions. Therefore, their RF emissions are very low and are not likely to cause any interference in nearby electronic equipment.
RF emissions CISPR 11	Class B	Class B	The Explorer Mini and the battery charger (PF2401A5SL) are suitable for use in all establishments, including domestic establishments and those directly connected to the public low voltage power supply network that supplies power to buildings that are used for domestic purposes.
Harmonic emissions IEC 61000-3-2	Not applicable	Class A	
Voltage fluctuations/ flicker emissions IEC 61000-3-3	Not applicable	Complies	

How to contact your production unit

Sundsvall, Sweden	Nashville, USA
PU SUN Permobil AB Klökanvägen 16 863 41 Sundsvall Sweden	PU NAS Permobil Inc. 300 Duke Drive Lebanon, TN 37090 USA
+46 60 59 59 00	+1 800 736 0925
+46 60 57 52 50	+1 800 231 3256
info@permobil.com	support@permobil.com
www.permobil.com	www.permobil.com

How to contact your local office

United States

Permobil Inc.

300 Duke Drive
Lebanon, TN 37090
USA

+1 800 736 0925

+1 800 231 3256

support@permobil.com

www.permobil.com

PU NAS

permobil

337358 eng-US

7 330818 366962

www.permobil.com