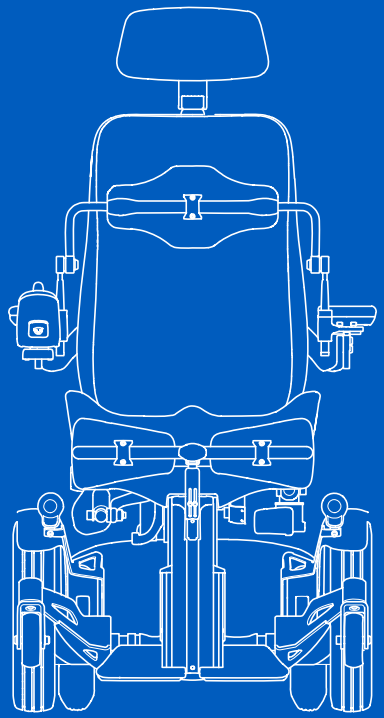

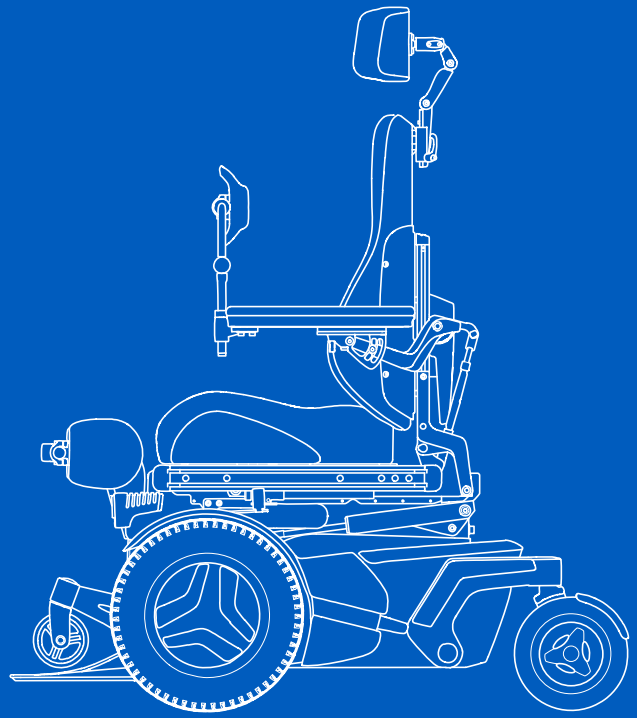

F5 Corpus VS

User manual | American English

Welcome to the Permobil family

We hope that you enjoy your new power wheelchair. Permobil's founder, Dr. Per Uddén, believed that every person has the right to have his or her disability compensated as far as possible using the same technology that we all use in our everyday life. Your new wheelchair is a state-of-the-art medical device designed to achieve this goal by providing unparalleled convenience, comfort, and technology.

Produced and published by Permobil
Edition: 8
Date: 2026-01-12
Order no: 339834 eng-US

How to contact Permobil

Permobil Inc.
300 Duke Drive
Lebanon, TN 37090
USA

+1 800 736 0925

+1 800 231 3256

support@permobil.com

www.permobil.com

Production units. See page 73.

Head office of the Permobil group

Permobil AB
Klökanvägen 16
863 41 Sundsvall
Sweden

+46 60 59 59 00

info@permobil.com

www.permobil.com

1 Introduction 4

2 Overview 5

2.1 Wheelchair specification 6
2.2 Tool bag 7
2.3 General control panel 8
2.4 Omni2 9
2.5 Connected wheelchair 10
2.6 Lights and reflectors 11
2.7 Wheels 12
2.8 Tie-down points 13
2.9 Serial number label 14
2.10 Accessories 15
2.11 Spare parts 16
2.12 User manual 17

3 Safety 18

3.1 Types of warning signs 18
3.2 Warning signs 18
3.3 Contraindications 22
3.4 Labels 22

4 Wheelchair usage 25

4.1 Driving the wheelchair 25
4.2 Seat functions 28
4.3 Charging the batteries 33
4.4 Freewheel mode 34
4.5 Vehicle transportation 34
4.6 Air transportation 37
4.7 Main circuit breaker 39
4.8 Wheelchair storage 39
4.9 Manual adjustments 40
4.9.1 Headrest 40
4.9.2 Headrest with link hardware 42
4.9.3 Removing the backrest 45
4.9.4 Armrest 45
4.9.5 Footplates 50
4.9.6 Lumbar support 51
4.9.7 Trunk support 52
4.9.8 Chest support 53
4.9.9 Knee support 54
4.9.10 Rotational panel holder 55
4.9.11 Parallel panel holder 58
4.9.12 Positioning belt 60

5 Maintenance 61

5.1 Maintenance and inspection schedule 62
5.2 Cleaning 63
5.3 Inflating the drive wheel tires 64
5.4 Positioning belt 64

6 Restrictions and limitations 65

7 Troubleshooting 66

8 General information 68

8.1 Warranty 68
8.2 Standards and regulations 68
8.3 Electromagnetic interference 68
8.4 Federal Communications Commission (FCC) statement 69
8.5 Industry Canada statement 70
8.6 Reporting incidents 71
8.7 Scrapping and recycling 71
8.8 Technical specifications 72

1 Introduction

Before you use your wheelchair for the first time, you must read and understand the contents of this user manual. It instructs you on how to properly and safely use and care for your wheelchair. You must also read and understand the user manuals for your specific accessories before you use your wheelchair. This user manual and additional information concerning our products are available at www.permobil.com or by telephone.

Your power wheelchair is a complex medical device prescribed to you by your healthcare provider and configured to meet your needs. Permobil is not responsible for inappropriate prescription or selection of models or features, or for improper use of or modifications to the wheelchair. If the wheelchair has an unexpected impact on your health, contact your healthcare provider.

The illustrations in this user manual are generic and may not be exact depictions of your wheelchair.

2 Overview

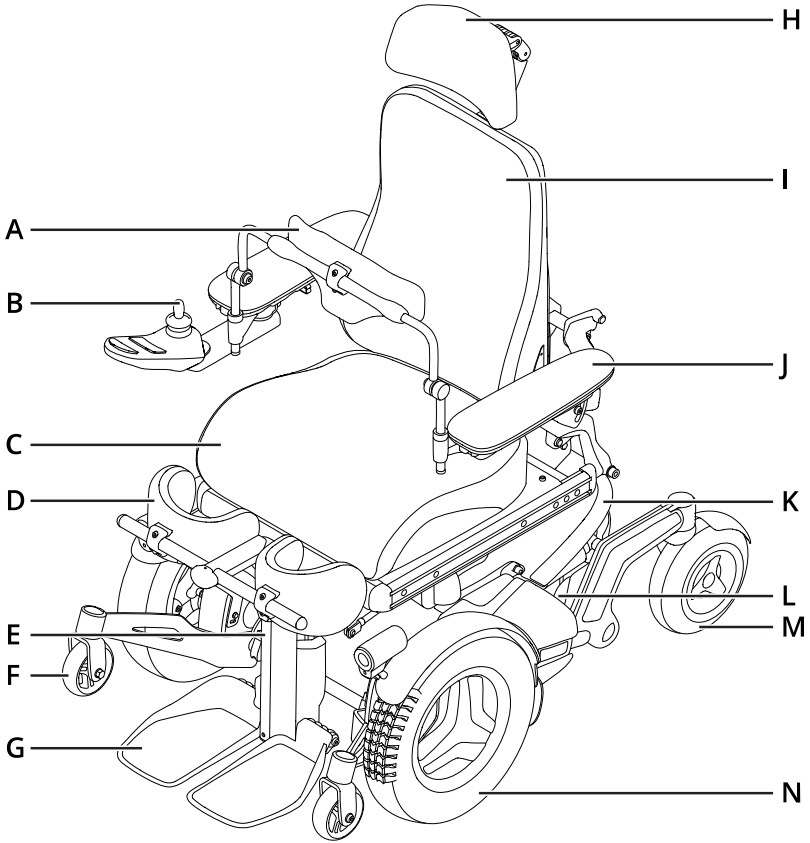

This chapter gives you an overview of your wheelchair. The parts on the overview image are described in more detail throughout the manual.

The F5 Corpus VS is a front-wheel drive power wheelchair for outdoor and indoor use. It has a standing function. It is intended for people limited to a seated position. It is not an all-terrain vehicle and must be used in accordance with the restrictions outlined in this user manual.

The expected service life of this product is five years.

A. Chest support
B. Control panel
C. Seat
D. Knee support
E. Leg rest
F. Support wheel
G. Footplate
H. Headrest
I. Backrest
J. Armrest
K. Chassis
L. Serial number label
M. Caster wheel
N. Drive wheel

2.1 Wheelchair specification

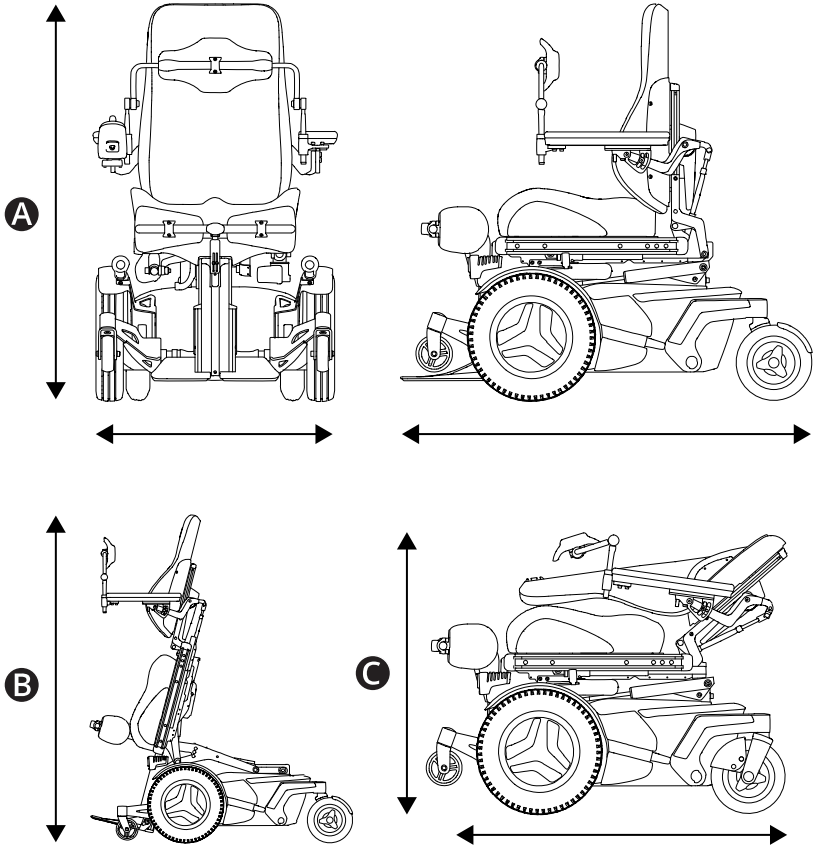

Product name:	**F5 Corpus VS**
Model version:	**3**
Wheelchair class:	**B**

Ⓐ Sitting position
Height: 1090–1170 mm (43"–46")
Width: 650–790 mm (25.5"–31")
Length: 1165 mm (46")
Ⓑ Standing position
Height: 1920 mm (76")
Width: 790 mm (31")
Length: 1260 mm (50")
Ⓒ Smallest transportation size
Height: 825–875 mm (32.5"–34.5")
Width: 650–790 mm (25.5"–31")
Length: 965 mm (38")

Weight specification
Wheelchair with batteries: 206 kg (454 lb.)
Maximum user weight: 136 kg (300 lb.)
The maximum user weight can vary depending on the wheelchair configuration.

2.2 Tool bag

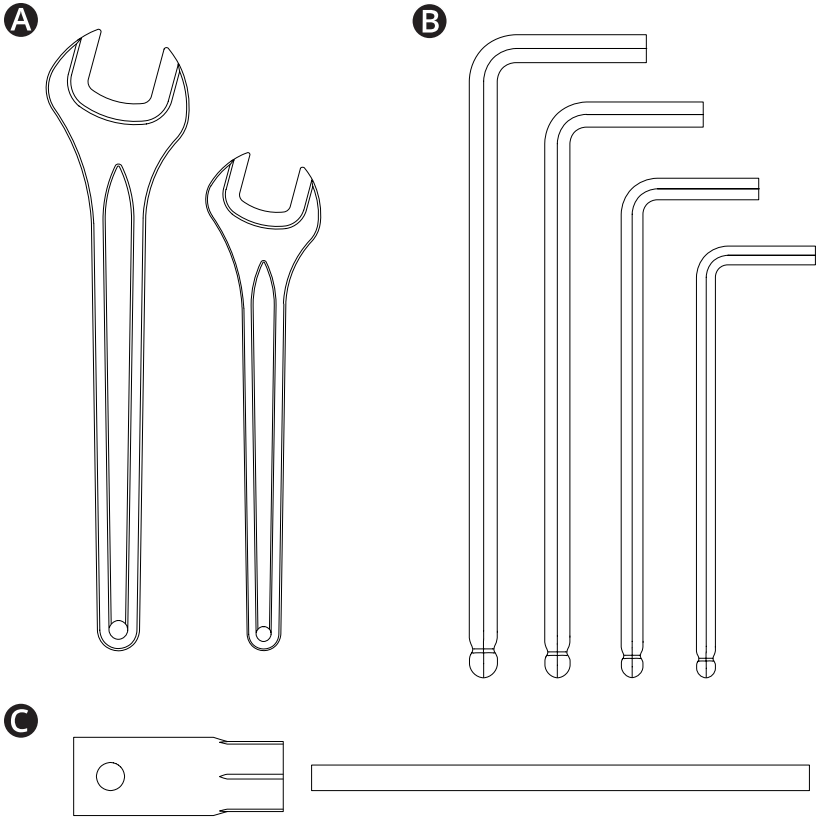

The wheelchair comes with a tool bag for maintenance and adjustments. It contains the following tools:

Ⓐ Wrench
general maintenance
11 mm
13 mm

Ⓑ Allen keys
general maintenance and seat adjustment
2–6 mm

Ⓒ Socket wrench
general maintenance
15 mm

2.3 General control panel

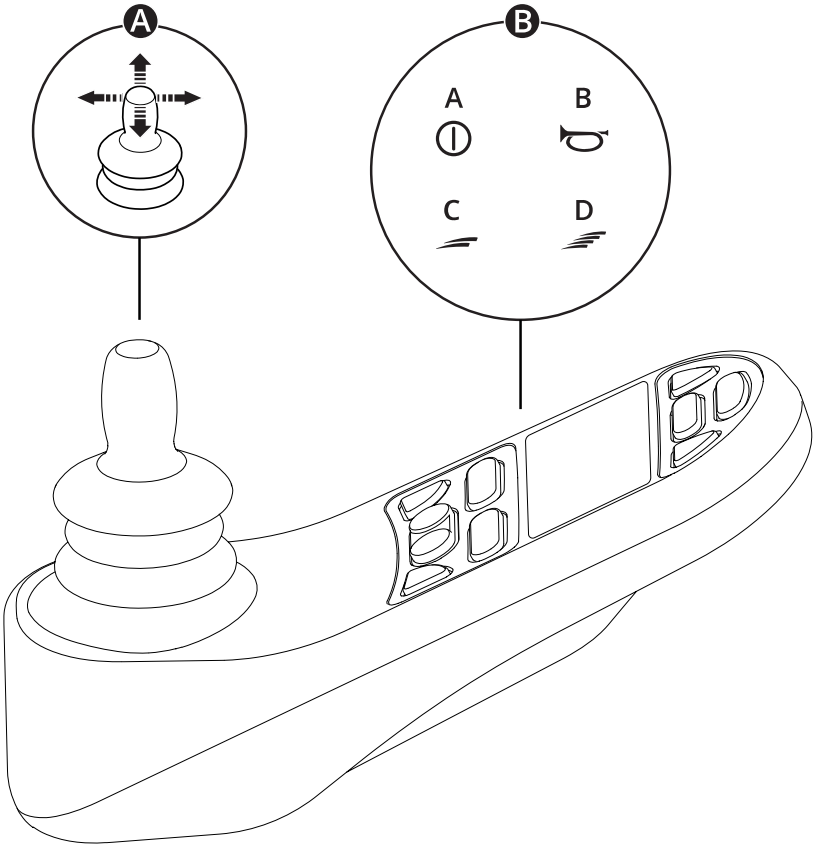

Ⓐ Joystick

Ⓑ Example of button functions

A. On/off
B. Horn
C. Decrease maximum speed
D. Increase maximum speed

For more information, see the user manual of your control panel:

https://documentation.permobil.com/manuals/control_panels/

2.4 Omni2

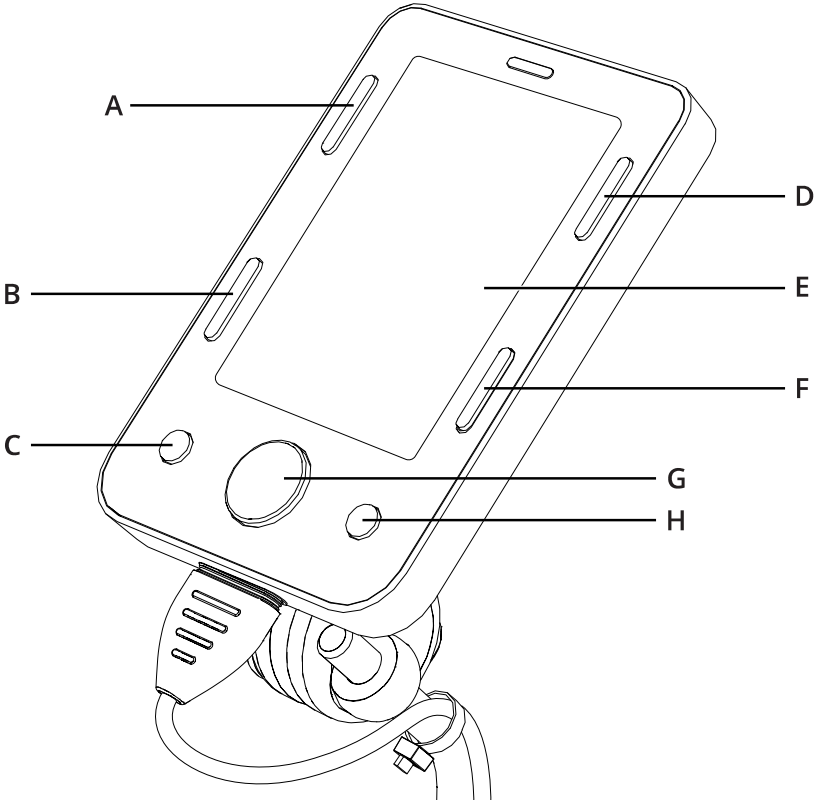

Your wheelchair can be equipped with an Omni2. An Omni2 is a device that makes it possible to operate the wheelchair with something other than a standard joystick.

Button configuration for Omni2.

A.	On/off	**E.**	LCD screen
B.	Profile	**F.**	Mode
C.	Minus (–)	**G.**	Navigation
D.	Settings	**H.**	Plus (+)

For more information, see the user manual of your Omni2 on the website of Curtiss-Wright:

http://support.pgdt.com/omni2-manual.pdf

2.5 Connected wheelchair

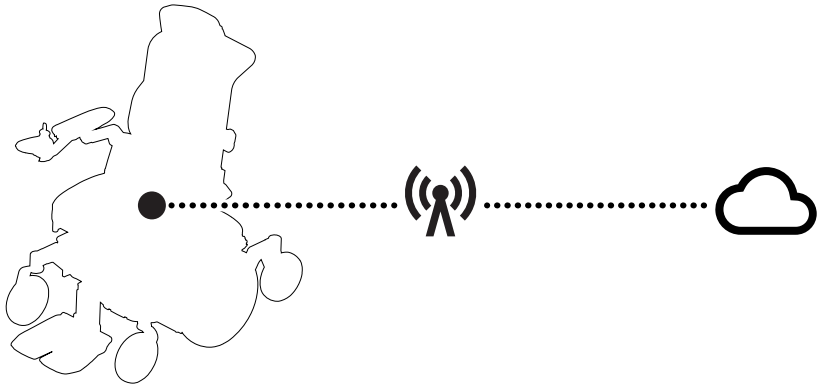

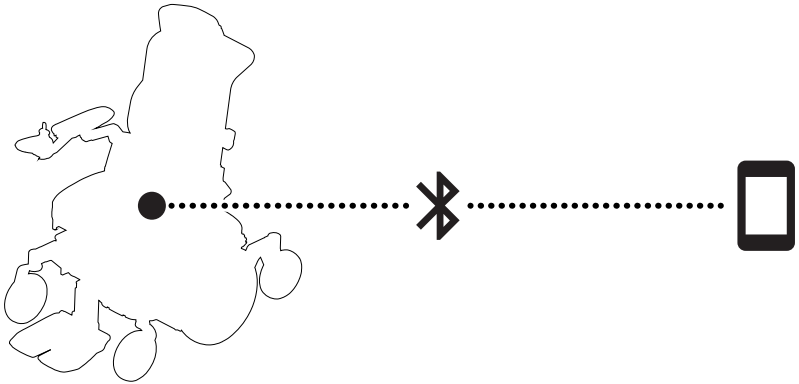

Your power wheelchair has a Power Platform, which contains a radio transmitter. In certain areas, radio transmission is not allowed and your wheelchair must be set to flight mode ✈.

For more information, see the user manual of your control panel:

https://documentation.permobil.com/manuals/control_panels/

2.6 Lights and reflectors

Ⓐ

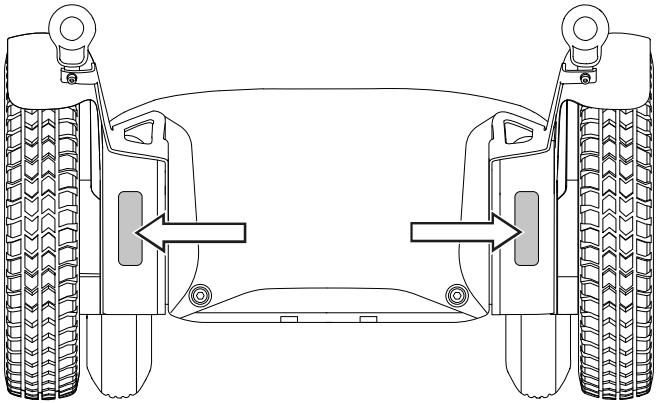

Ⓑ

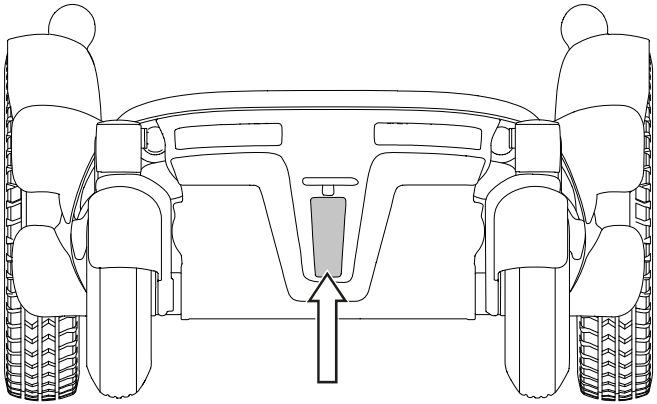

The wheelchair is equipped with reflectors at the front and rear.

Front lights, rear lights, and turn signals are optional.

Ⓐ Front reflectors

Ⓑ Rear reflectors

If the wheelchair is equipped with lights, Permobil recommends that you use them whenever you drive near public rights of way.

Do not drive in the dark unless your wheelchair is equipped with lights. When you drive in the dark, be extra cautious. Additionally, use your lights as required by local law.

2.7 Wheels

Ⓐ

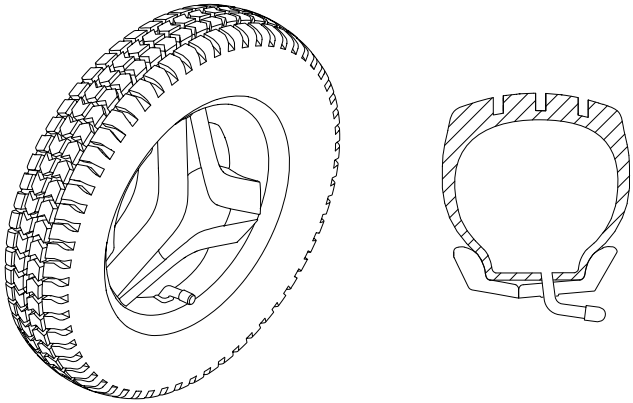

Ⓑ

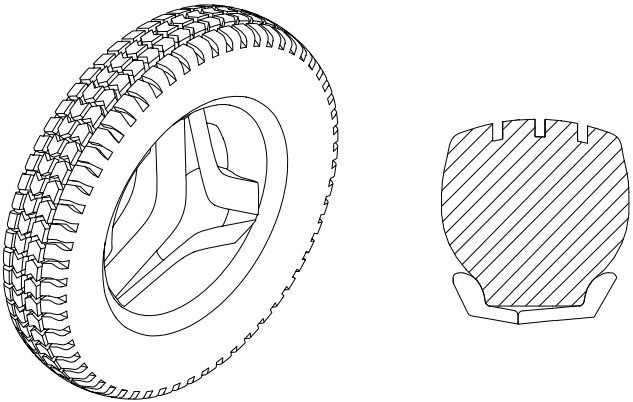

The wheelchair drive wheels have pneumatic tires or flat-free (foam filled) tires. The caster wheels have pneumatic tires or solid polyurethane tires.

Ⓐ Pneumatic tires
Ⓑ Flat-free (foam filled) tires

📖 Inflating the pneumatic tires. See page 64.

2.8 Tie-down points

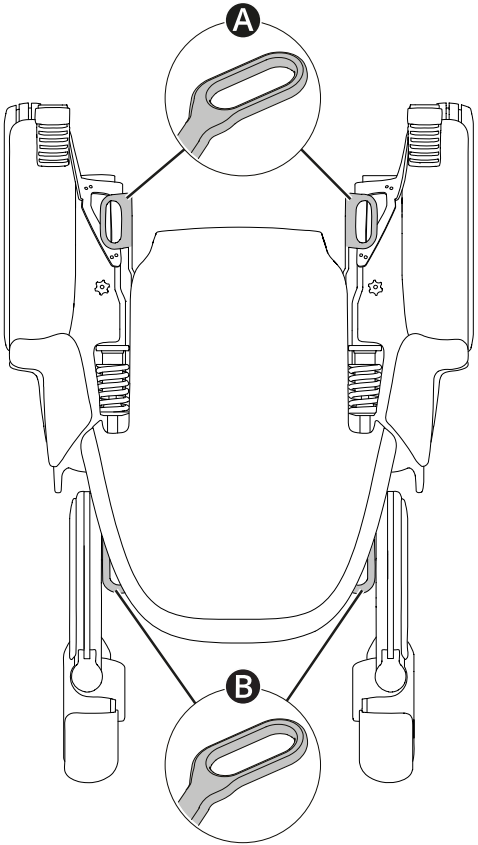

The wheelchair is equipped with four tie-down points used for transportation 🚗✈🚌. Two in the front Ⓐ and two in the rear Ⓑ.

📖 Vehicle transportation. See page 34.

2.9 Serial number label

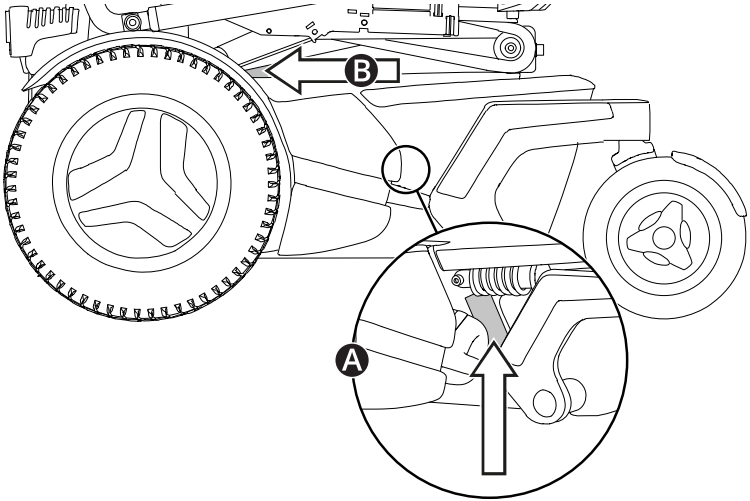

The serial number label is located on the lower, left side of the wheelchair chassis Ⓐ. An additional serial number label is located on the seat tilt Ⓑ. You may need to tilt the seat to see the serial number label.

The contents of the serial number label are described on page 23.

2.10 Accessories

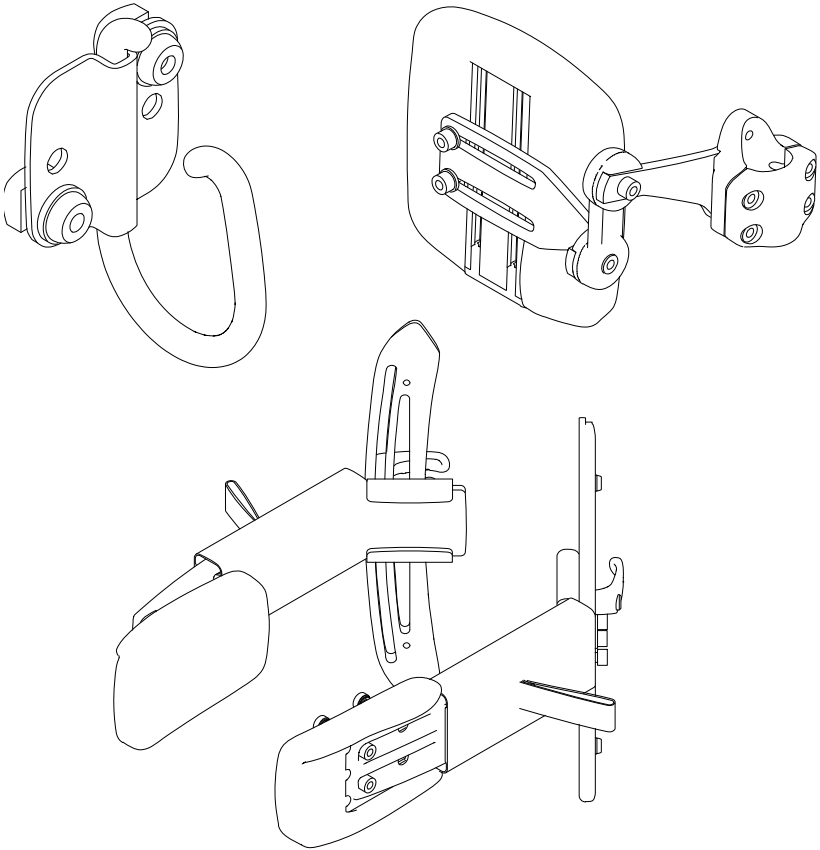

Accessories for Permobil products are subject to continuous development. Contact your nearest Permobil dealer for more information on the accessories available for your product. Only use accessories that are authorized by Permobil.

2.11 Spare parts

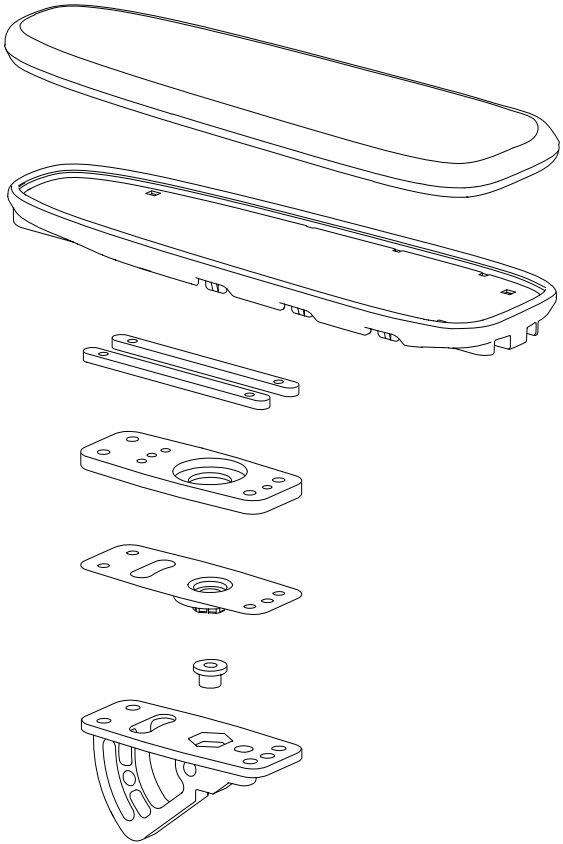

Spare parts must be ordered through your dealer.

Only use spare parts that are authorized by Permobil.

2.12 User manual

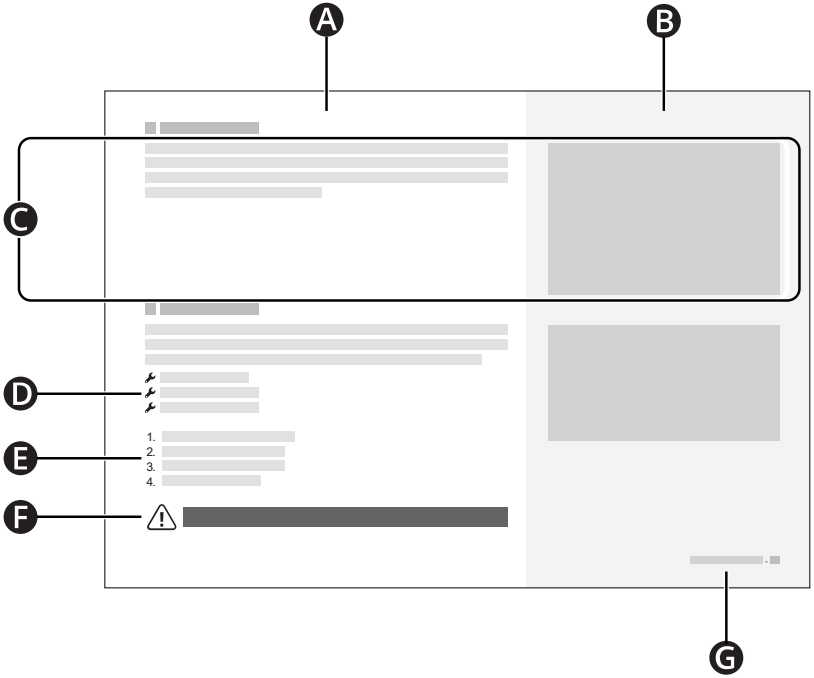

- Ⓐ Main text area
- Ⓑ Main illustration area
- Ⓒ Text correlates to the illustration to the right
- Ⓓ Tool list
- Ⓔ Instruction steps
- Ⓕ Warning sign
- Ⓖ Chapter and page number

3 Safety

Your wheelchair is a complex medical device and must be used safely. This chapter contains important information about how to safely use your wheelchair.

Permobil is not responsible for personal injuries or property damage resulting from any person's failure to follow the warnings and instructions in this user manual or from failure to exercise good judgment.

The following warnings are referenced throughout this user manual. Anytime you see the exclamation point symbol, refer back to this chapter to review the appropriate warning.

3.1 Types of warning signs

The following types of warning signs are used in this manual:

WARNING!

Indicates a hazardous situation which, if not avoided, could result in injury or death as well as damage to the product or other property.

CAUTION!

Indicates a hazardous situation which, if not avoided, could result in damage to the product or other property.

IMPORTANT!

Indicates important information.

3.2 Warning signs

WARNING! Follow the warnings and instructions

Follow the warnings and instructions in this user manual. If you do not, it can lead to bodily injury.

WARNING! Only use the standing function on level ground

Only use the standing function on level ground. If you do not, the wheelchair can lose traction or become less stable and injure you.

WARNING! Vehicle seating requirements

When you use the wheelchair as a seat in a vehicle, it must be forward-facing and you must use a three-point belt restraint, including a shoulder and pelvic belt, to reduce the risk of head and chest impacts with vehicle components. The wheelchair is only designed and tested for use in this configuration. If the wheelchair is used in another vehicle seating configuration, it can lead to bodily injury or death.

WARNING! Use tie-down points and docking systems properly

Make sure that you use tie-down points and docking systems properly. If you do not use them properly, it can lead to bodily injury or death.

WARNING! Pay attention to release mechanisms

Adjust your restraint system such that the release mechanisms cannot be pressed during a crash. If you do not, it can lead to bodily injury or death.

WARNING! Positioning aids do not replace seatbelts

Wheelchair positioning aids do not replace vehicle mounted seatbelts. In a traffic accident, they do not provide the same protection as vehicle mounted seatbelts. If you use positioning aids as a seatbelt, it can lead to bodily injury or death.

WARNING! Use positioning aids at all times

Use securely fastened positioning aids, including your positioning belt, at all times. If you do not, you can sustain bodily injuries.

WARNING! Do not overload the wheelchair

Do not use the wheelchair to pull any kind of object and never hang excessive weights on the wheelchair. If you do, the wheelchair can become less stable and injure you.

WARNING! Remain aware of your wheelchair's dimensions

Always remain aware of your wheelchair's dimensions. Some emergency exits or paths can be too small for your wheelchair to navigate through them.

IMPORTANT! Do not drive on public roads

Do not drive the wheelchair on public streets or roads. Your wheelchair is not an automobile. Obey all local pedestrian rules and always drive your wheelchair defensively.

IMPORTANT! Do not modify the wheelchair

Do not modify your wheelchair or any of its components. Your wheelchair has been configured specifically for your needs as prescribed by your healthcare provider. Special skills, training, and knowledge are needed to set up, modify, and repair the wheelchair.

WARNING! Avoid steep slopes

Do not drive the wheelchair on slopes steeper than 10°. If you do, the wheelchair can become less stable and injure you. For maximum performance and stability, use caution on slopes steeper than 6°.

WARNING! Use freewheel mode cautiously

Freewheel mode should only be used on level ground and when an attendant is present to control the wheelchair. If you use freewheel mode on an incline or without an attendant, you can get injured or cause property damage.

WARNING! Do not exceed the maximum user weight

Do not drive the wheelchair if you exceed the maximum user weight. If you do, the wheelchair can harm you or break.

WARNING! No passengers

Do not use the wheelchair to carry passengers, regardless of their age or weight. If you do, it can affect the wheelchair's maneuverability and stability.

WARNING! Drive extra carefully when lifted or tilted

If the seat or backrest is lifted or tilted on flat ground, drive at a low speed. If the seat or backrest is lifted or tilted, do not drive the wheelchair on slopes or over obstacles. If you do, the wheelchair can become less stable and injure you.

WARNING! Do not remove the support wheels

Do not remove the support wheels. If you do, the wheelchair is more likely to tip forward, which can cause injury.

WARNING! Turn off the power

Turn off the power before you get in or out of the wheelchair or lift the armrest. If you do not, the wheelchair can move unintentionally and injure you.

WARNING! Do not use the wheelchair if it behaves abnormally or erratically

If the wheelchair is not behaving as it should, or if you suspect that something is wrong, stop the wheelchair as soon as possible, turn off the power and contact your service provider or Permobil for further information. If you use a wheelchair that behaves abnormally or erratically, it can lead to bodily injury.

IMPORTANT! Do not use a damaged wheelchair

If the wheelchair or its accessories have suffered transportation damage, damage during driving, or damage from other causes, you must inform Permobil as soon as possible and immediately stop using your wheelchair. There is a risk that the wheelchair or its accessories can no longer be used safely. Contact your service provider or Permobil for further information.

WARNING! Keep the electronics dry

Make sure that the electronics are not exposed to moisture. If any of the shrouds or the joystick boot have cracks or tears, replace them immediately. Exposure to moisture can cause the wheelchair to short-circuit or catch fire, which can lead to personal injury or property damage.

WARNING! Do not get pinched

The wheelchair is heavy and contains many moving parts, which means that you can be pinched when you adjust the wheelchair or if you use the wheelchair incorrectly. When you see this warning, be mindful of your body location to avoid being pinched. Do not put any part of your body between moving parts.

WARNING! Use leg rest tilt cautiously

Do not use the leg rest tilt when a knee support is in place. If you do, it can lead to bodily injury.

IMPORTANT! Recycle all batteries

Used batteries must be disposed of responsibly in accordance with local recycling regulations.

WARNING! Use the recommended tire pressure

Use the recommended tire pressure. If you overfill the tires, they can explode and cause bodily injury.

IMPORTANT! Electromagnetic fields

The electronics in a power wheelchair can be affected by external electromagnetic fields (for example mobile phones).

WARNING! Discontinue use after extraordinary events

Do not use your wheelchair if it has been dropped, crushed, exposed to fire, submerged in water, or involved in a vehicular accident, or other extraordinary events. Events like these can lead to significant damage that is impossible to detect upon inspection. Contact your service provider or Permobil. Damage caused by these types of incidents exceeds the limits covered by the manufacturer's warranty.

WARNING! Sufficient ground clearance

Always position the leg rest and footplate high enough so that they will not hit the ground when you drive your wheelchair. This includes when you drive over changing slopes or over obstacles. If you allow the leg rest or footplate to hit the ground, the wheelchair can become less stable and injure you.

3.3 Contraindications

Here are the most common reasons not to use the standing function:

- **Reduced bone density** Should the bones already be very weak it is not recommended to stand. This could lead to fractures. In this case consult your doctor for a bone density measurement.
- **Poor circulation** For heart or circulatory diseases standing should only occur under medical supervision (cardio training). Please consult a doctor in this case.
- **Severe mobility limitations or severe contractures**

3.4 Labels

Your wheelchair has labels that contain important information about safety and proper use. These labels are described in greater detail in this subchapter. Do not remove labels from the wheelchair. If a label becomes difficult to read or falls off, order a replacement from Permobil.

Serial number label

A. SN Serial number of the wheelchair
B. Maximum user weight
C. Model: Model
Model version: Model version
FCC ID: Federal Communications Commission identifier
D. Name and address of the manufacturer
E. YYYY-MM-DD: Date of manufacture
F. CE mark
MD Medical device
Federal Communications Commission approved equipment
G. Unique Device Identification (UDI) as a GS1 DataMatrix and human readable format including: GTIN - global trade item number, date of manufacture, and serial number

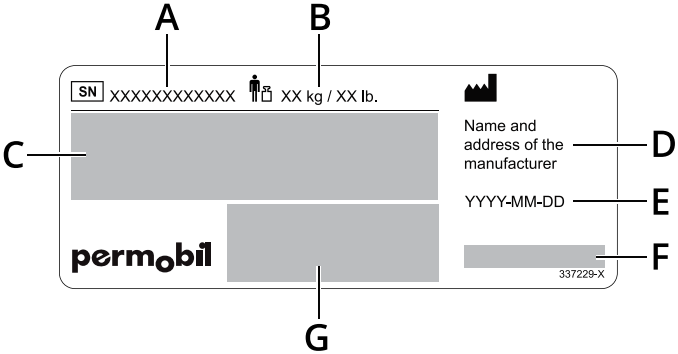

Warning

This label indicates that special attention is required.

Read the instructions

This label means that you must refer to your user manual.

Pinch risk

This label indicates a pinch risk. When you see this label, be extra careful to avoid pinching yourself or your belongings.

Main circuit breaker

This label shows the on and off positions for the main circuit breaker. Read more on page 39.

Freewheel mode

The picture above the arrows indicates that the wheelchair is not in freewheel mode. The pictures below the arrows indicate that the wheelchair is in freewheel mode. Read more about freewheel mode on page 34.

Tie-down points

This label shows the wheelchair's tie-down points. Read more about wheelchair transportation on page 34.

Support wheels

This label indicates that you must not remove your support wheels.

Conformance with ISO 7176–19

This label shows conformance with ISO 7176–19. See 4.5.2 *Using the wheelchair as a seat in a vehicle*.

4 Wheelchair usage

This chapter aims to provide you with basic information to quickly get started with your wheelchair, and also provide you with information you may need in your everyday use of the wheelchair. The following subchapters describe how to drive the wheelchair, how to use the most common seat functions, how to charge the batteries, how to enter and exit freewheel mode, and some helpful information if you want to transport your wheelchair. They also describe the main circuit breaker, wheelchair storage, and manual adjustments.

4.1 Driving the wheelchair

You must always drive your wheelchair carefully and defensively. Your wheelchair is a complex medical device, not an automobile. Due to the individualized nature of Permobil products, your wheelchair is equipped with one of numerous different ways to drive it. The most common way is described below, but your wheelchair may not conform to this process depending on its individualization.

To drive your wheelchair, you must first turn on the power. The power button or switch is most commonly located on the wheelchair's control panel, which is usually attached to the armrest. Most Permobil wheelchairs also include a joystick on the control panel. Use this joystick to turn the wheelchair and to drive forward and rearward. Simply press the joystick in the direction you want to go Ⓐ. The further you press the joystick, the faster the wheelchair will move. Release the joystick to stop moving.

Drive as gently as possible and avoid sudden braking. Do not turn off the power to stop the wheelchair. If you turn off the power while you drive, the wheelchair will stop abruptly.

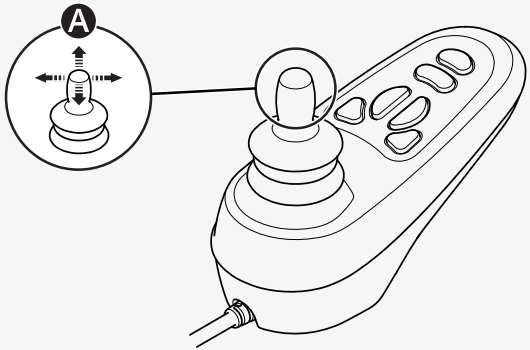

Do not move the joystick before, during, or immediately after you turn on the control system. If you move the joystick during this time, it can generate a joystick error. If this happens, turn off and then on the wheelchair.

For additional information on how to control your wheelchair, refer to any other documentation received with your wheelchair or contact your Permobil dealer.

Do not use the joystick as support when you get in or out of the wheelchair.

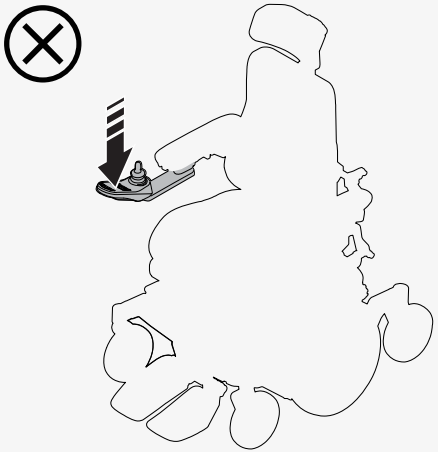

The first time you drive your wheelchair must be in the presence of a person who is qualified to ensure that the wheelchair is properly fit for you.

Make sure that your feet are correctly and securely positioned on the footplates before you drive the wheelchair.

4.1.1 Driving restrictions

The wheelchair consumes much power when you drive up a hill, climb over obstacles, or drive on rough terrain (for example sand). Permobil recommends that you, as far as possible, avoid to drive for a long period of time in these types of conditions.

Permobil recommends that you do not use the wheelchair in extreme conditions, such as heavy rain, thick snow, or excessive heat or cold. Prolonged exposure to sunlight or cold temperatures can cause wheelchair surfaces to become very hot or cold. The driving range of your wheelchair is approximately 25 km (16 mi) when the battery temperature is 25°C (77°F). The driving range is affected by the battery temperature. Temperatures below 25°C (77°F) can shorten the driving range. Temperatures below −25°C (−13°F) can harm your batteries.

Do not use the wheelchair on stairs or escalators. Remember that alcohol can affect your ability to drive a power wheelchair. Do not let children drive the wheelchair without supervision.

This user manual's wheelchair specification states the wheelchair's maximum user weight. The stated user weight includes the user and any personal effects.

Avoid sudden stops and starts. Use caution in any of the following situations:

- when you are near edges or on elevated surfaces
- when you drive on soft or uneven surfaces, such as grass, gravel, sand, ice, or snow
- when you drive from an area of high traction (for example a sidewalk) to an area of low traction (for example grass)
- when you are in narrow or confined spaces
- when there are ridges that could cause the wheelchair to move in a different direction

When you drive over an obstacle, always directly face it. You can drive over obstacles up to 75 mm (3"). If you drive over higher obstacles, there is a greater risk of tipping and of damage to the wheelchair. If a car lock is installed on the wheelchair, it affects the ground clearance.

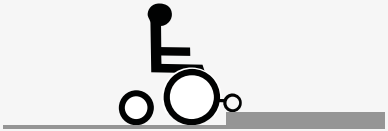

When you drive downhill, additional precautions must be taken. Select the lowest maximum speed and proceed with caution. Driving down a slope can shift your center of gravity forward. Release the joystick if the wheelchair rolls faster than you would like. This makes the wheelchair stop, and you can descend again more slowly. Avoid sudden stops and starts. Note that the distance required to stop will increase when you drive downhill.

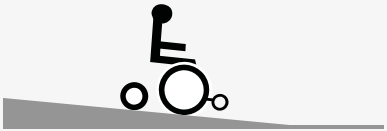

Drive the wheelchair straight up slopes whenever possible.

4.2 Seat functions

Your wheelchair can have seat functions. A seat function is a power adjustment.

Due to the custom nature of Permobil products, your wheelchair is equipped with one of numerous different ways to adjust its seat functions. For additional information on how to control your wheelchair, refer to any other documentation received with your wheelchair or contact your Permobil dealer.

Permobil offers the following seat functions. Available functions can vary depending on the equipment fitted on your wheelchair.

- seat lift
- seat tilt
- standing function
- backrest tilt
- leg rest tilt
- footplate lift

The wheelchair's center of gravity changes when you change the position of the seat and/or the backrest. When you lift or tilt the seat or backrest or when you use the standing function, you decrease the wheelchair's stability.

WARNING! Drive extra carefully when lifted or tilted

4.2.1 Seat lift

The seat lift lifts and lowers the seat. When the seat is lifted, the maximum speed of the wheelchair can be reduced automatically or the ability to drive the wheelchair can be restricted completely. The reduced maximum speed can be indicated with a turtle on the display of the control panel, and the drive restriction can be indicated with a red light.

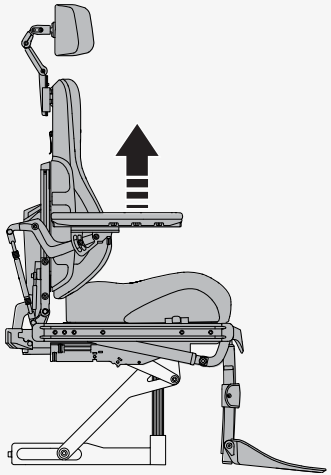

4.2.2 Seat tilt

The seat tilt tilts the entire seat, from headrest to leg rest. When the seat is tilted, the maximum speed of the wheelchair can be reduced automatically or the ability to drive the wheelchair can be restricted completely. The reduced maximum speed can be indicated with a turtle on the display of the control panel and by a yellow light on the switch box. The drive restriction can be indicated with a red light on the switch box or by a flashing turtle on the display of the control panel.

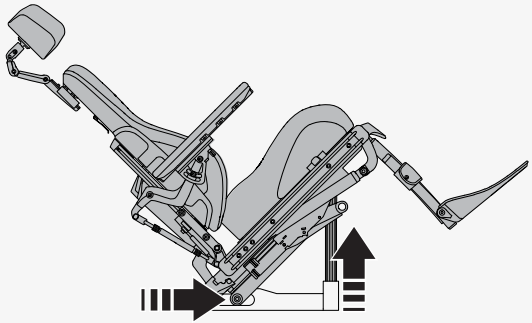

4.2.3 Standing function

The standing function makes it possible for you to stand up in the wheelchair. Only use the standing function on level ground, regardless of if you are stationary or driving.

When you stand up, the maximum speed of the wheelchair is reduced automatically. This can be indicated with a turtle on the display of the control panel.

The wheelchair's center of gravity changes when you change the position of the seat and the backrest. When you use the standing function, you decrease the wheelchair's stability.

WARNING! Only use the standing function on level ground

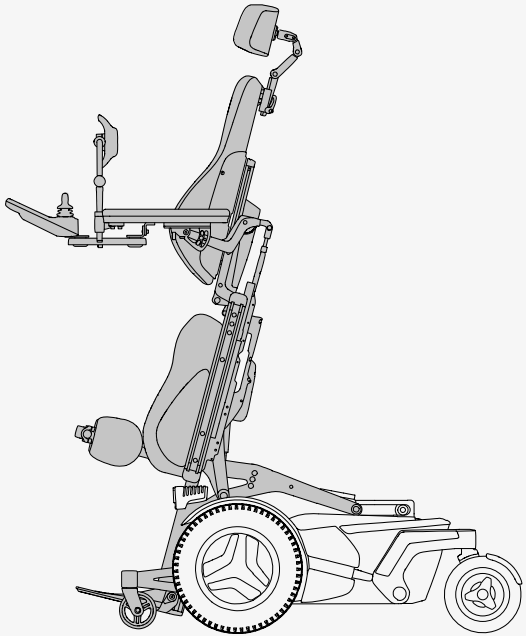

4.2.4 Backrest tilt

The backrest tilt tilts the backrest rearward and back up again. When the backrest is tilted, the maximum speed of the wheelchair can be reduced automatically or the ability to drive the wheelchair can be restricted completely. The reduced maximum speed can be indicated with a turtle on the display of the control panel and by a yellow light on the switch box. The drive restriction can be indicated with a red light on the switch box or by a flashing turtle on the display of the control panel.

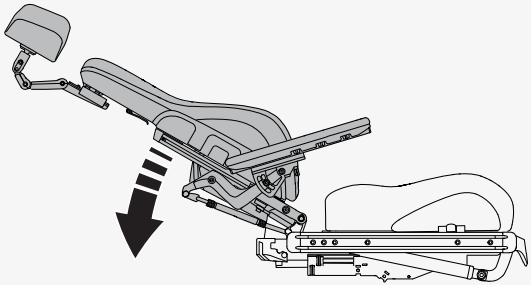

4.2.5 Leg rest tilt

The leg rest tilt tilts the leg rest. When the leg rest is tilted, the maximum speed of the wheelchair can be reduced automatically or the ability to drive the wheelchair can be restricted completely. The reduced maximum speed can be indicated with a turtle on the display of the control panel and by a yellow light on the switch box. The drive restriction can be indicated with a red light on the switch box or by a flashing turtle on the display of the control panel.

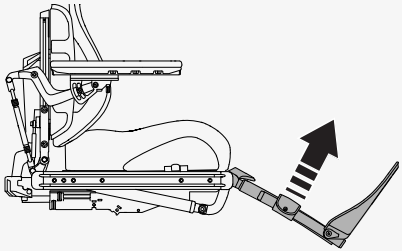

WARNING! Use leg rest tilt cautiously

4.2.6 Footplate lift

The footplate lift shortens or lengthens the leg rests to adjust the height of the footplates. You can use this function to adjust the pressure on the back of your thighs.

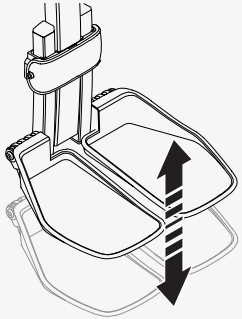

4.3 Charging the batteries

You can charge your wheelchair from the control panel. The charger socket is located at the front of the joystick. Always connect the charger to the wheelchair first before you connect the charger to the wall. It is not possible to drive the wheelchair while it charges.

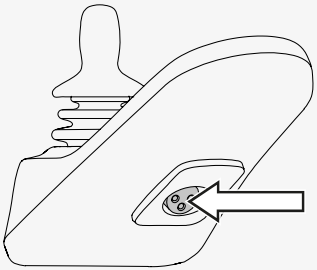

Charge the wheelchair as often as possible. Do not use the wheelchair if the battery charge is low because you could become stranded. If the batteries become completely discharged, charge them immediately.

Only use a Permobil charger intended for use with your wheelchair. Charge the batteries in a well-ventilated, dry room. Never expose your batteries or any part of your wheelchair to an open flame.

For more information and further instructions, see the battery charger's manual that was supplied with your wheelchair or contact Permobil.

4.4 Freewheel mode

The wheelchair is fitted with two freewheel levers. When the freewheel levers are released, the wheelchair's brakes are disengaged from the motor. When in freewheel mode, the wheelchair can be moved manually, but cannot be controlled electronically.

When the wheelchair is in freewheel mode, it must not be possible to drive the wheelchair. If it can be driven, contact your service technician.

WARNING! Use freewheel mode cautiously

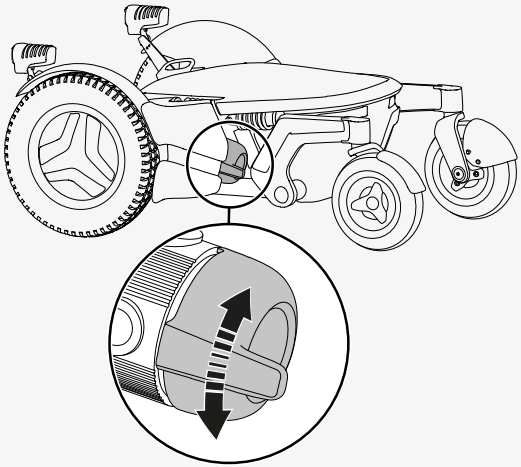

4.4.1 Entering freewheel mode

1. Make sure that the wheelchair is on level ground.
2. Turn off the wheelchair.
3. Flip the freewheel levers downward.

4.4.2 Exiting freewheel mode

1. Turn off the wheelchair.
2. Flip the freewheel levers upward.

4.5 Vehicle transportation

This chapter describes how you transport your wheelchair in a vehicle. The wheelchair must only be transported in wheelchair accessible vehicles.

4.5.1 Securing the wheelchair in a vehicle

This chapter describes how you secure the wheelchair in a vehicle. You must either secure the wheelchair at its tie-down points or use a docking system that complies with ISO 10542–1:2012, which is an international standard that governs wheelchair tie-downs and occupant-restraint systems.

Remove loose objects, trays, and other auxiliary equipment from your wheelchair and store them safely before you transport your wheelchair in a motor vehicle. If you transport a wheelchair in a motor vehicle with loose objects, trays, or other auxiliary equipment the vehicle's occupants could suffer bodily injury.

This is how you secure the wheelchair at its four tie-down points. Make sure that the wheelchair is properly secured and that the wheelchair is not in freewheel mode. Secure the wheelchair with straps at the tie-down points at the front and rear. The tie-down points are marked with yellow labels Ⓐ. Use heavy-duty straps when necessary.

After you have secured the straps to your wheelchair, secure the other end of the straps to your vehicle according to the appropriate instructions. The end-fitting on the strap must comply with ISO 10542–1:2012, which is an international standard that governs wheelchair tie-downs and occupant-restraint systems. Every vehicle tie-down system is different, and it is important that you follow the instructions for your particular vehicle system.

To make transportation of the wheelchair easier, you can remove or fold down the backrest. This is done in a few simple moves. See page 45. If necessary, you can also remove the headrest. See page 40.

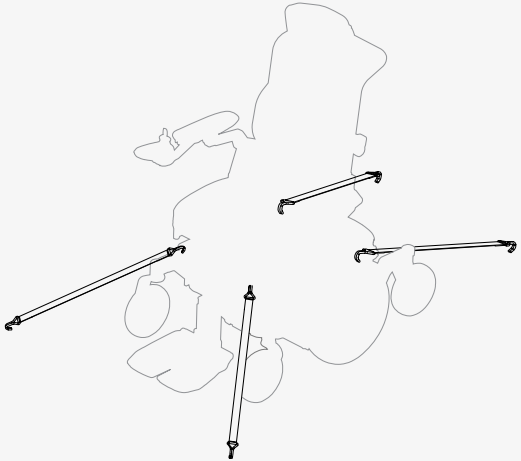

4.5.2 Using the wheelchair as a seat in a vehicle

Permobil recommends that, whenever feasible, you transfer to a vehicle seat and that you use the vehicle's restraint systems. The unoccupied wheelchair should be stored in a cargo area or secured in the vehicle during travel. Follow the instructions below if you want to use the wheelchair as a seat in a vehicle.

WARNING! Positioning aids do not replace seatbelts

WARNING! Vehicle seating requirements

The wheelchair shall be forward-facing when you use it as a seat in a vehicle. Permobil has no manufacturer-designated wheelchair-mounted belt restraints. Use the vehicle's restraint systems.

You must use both pelvic-belt restraints and shoulder-belt restraints. Pelvic- and shoulder-belt restraints should be used together as designed.

Make sure that the belt restraints are as tight as possible, without becoming uncomfortable, and that they are not twisted. They must be close to your body and not held away by parts of the wheelchair. Adjust your restraint system such that the release mechanisms cannot be pressed during a crash.

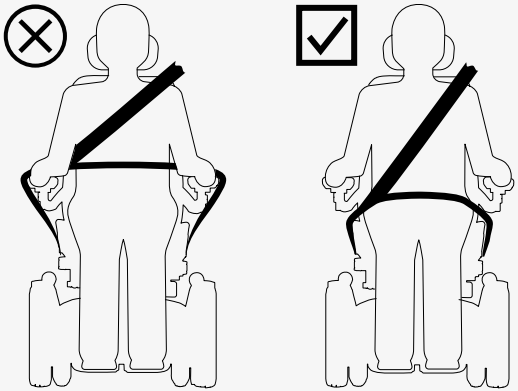

The shoulder-belt restraint should be worn over the middle of the shoulder. The pelvic-belt restraint should be in contact with and worn low across the pelvis and within the preferred zone of 30° to 75°. A steeper pelvic-belt angle between 45° to 75° to the horizontal is preferred. Make sure that no components of the wheelchair are lifted or tilted. The wheelchair must be in the position shown in the image.

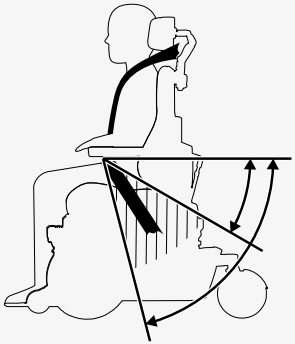

4.6 Air transportation

This chapter contains information that can be helpful if you are transporting your wheelchair by air.

4.6.1 Batteries

The main circuit breaker must always be in the off position. In most cases, gel batteries do not have to be removed from the wheelchair.

4.6.2 Weight and dimensions

Contact the relevant airline for applicable rules on weight and dimensions for your power wheelchair.

4.6.3 Preventing damage to wheelchair

Since the wheelchair will be put with other goods in a confined space during the flight, it is important to take preventive measures to minimize transportation damage to the wheelchair.

Cover the control panel and other sensitive objects with soft, shock-absorbing material (foam plastic or similar). Push the control panel toward the backrest. Tape any loose cables to the seat or covers.

4.7 Main circuit breaker

Your wheelchair has a main circuit breaker with two functions. You can use it to turn off the main power, for example before you transport the wheelchair. It also trips if there are any issues with the circuits.

The first time the main circuit breaker trips, you can reset it yourself. If it trips again, contact your service technician.

Use the lever at the back of the wheelchair to turn on and off or to reset the main circuit breaker. Always turn off the control panel before you turn off the main circuit breaker.

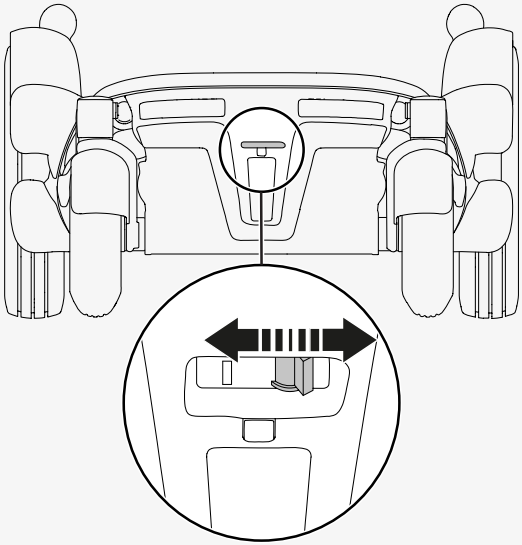

4.8 Wheelchair storage

You can store your wheelchair for a short or long period of time.

When you store it for a short time, make sure that the room is dry and at least 5°C (41°F). If the temperature is lower, the batteries might not charge fully. They are also more vulnerable to corrosion.

When you store it for a long time, fully charge the batteries before storage. Remember to switch off the main circuit breaker. Charge the batteries every month. You will need to switch on the main circuit breaker to charge the batteries, then switch off the main circuit breaker if the wheelchair is to remain in storage.

4.9 Manual adjustments

The wheelchair can have functions that are adjusted manually. Available functions vary depending on the equipment fitted on your wheelchair.

If you do not have the power lift function on your wheelchair, seat height must only be adjusted by authorized service providers.

4.9.1 Headrest

This chapter shows you how to adjust the height, depth, and angle of the headrest. It also shows you how to remove and install the headrest. Do not put any weight on the headrest while you adjust it. If you do, you can damage it.

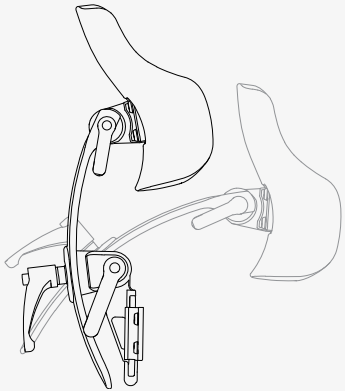

This is how you adjust the height and depth of the headrest.

1. Loosen the handle Ⓐ on the backrest.
2. Adjust the height or depth to the preferred position.
3. Tighten the handle Ⓐ.

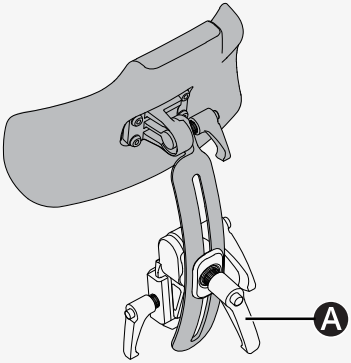

This is how you adjust the angle of the headrest.

1. Loosen the handle Ⓑ on the rear of the headrest.
2. Adjust the headrest angle to the preferred position.
3. Tighten the handle Ⓑ.

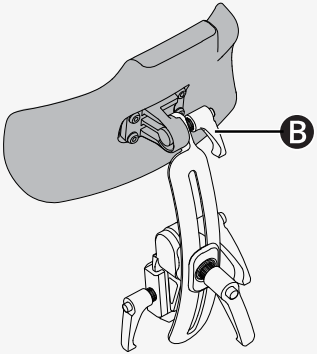

This is how you remove and install the headrest.

1. Loosen the handle Ⓒ on the backrest.
2. Lift the headrest straight up.

Install the headrest in the reverse order. You can remove and install the headrest without affecting current settings.

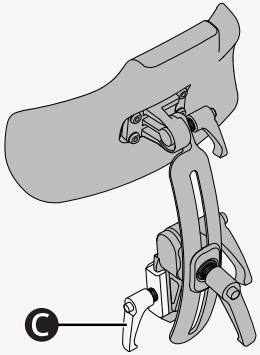

4.9.2 Headrest with link hardware

This chapter shows you how to adjust the height, depth, and angle of the headrest. It also shows you how to remove and install the headrest.

This is how you adjust the height of the headrest. There are four different height settings on your headrest. Setting Ⓐ is the lowest and setting Ⓑ is the highest. If setting Ⓐ is used, test the seat functions seat tilt and backrest tilt for interference.

🔧 Allen key 2.5 mm

1. Follow the instructions below to remove the headrest.
2. Remove the screw and put it in the preferred setting on the bracket.
3. Follow the instructions below to install the headrest.

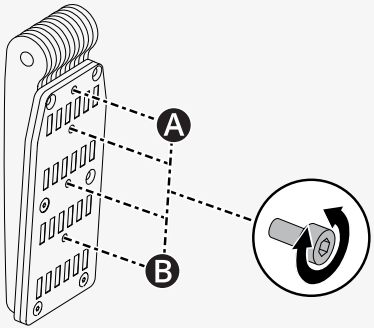

This is how you adjust the height and depth of the headrest.

🔧 Allen key 5 mm

1. Loosen the screw at each link Ⓐ.
2. Change the angle of the links as required.
3. Tighten the screws.

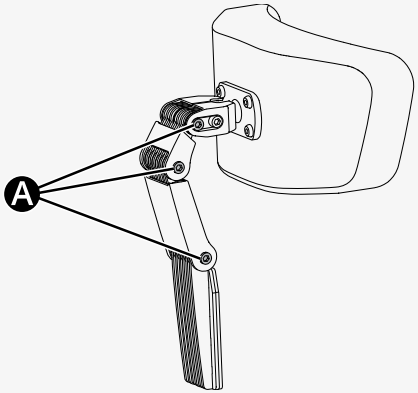

This is how you adjust the angle of the headrest.

🔧 Allen key 5 mm

1. Loosen the front screw Ⓐ in the top link.
2. Adjust the headrest angle to the preferred position Ⓑ.
3. Tighten the screw.

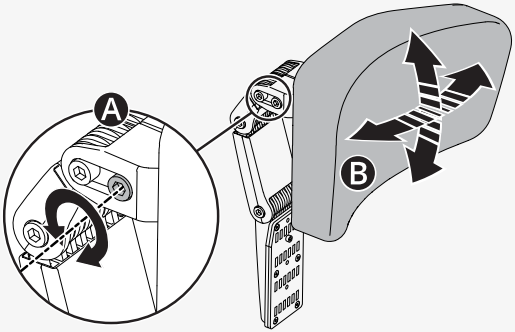

This is how you remove and install the headrest.

1. Loosen the handle Ⓐ at the rear of the backrest.
2. Lift the headrest straight up Ⓑ.

Install in the reverse order. You can remove and install the headrest without affecting current settings.

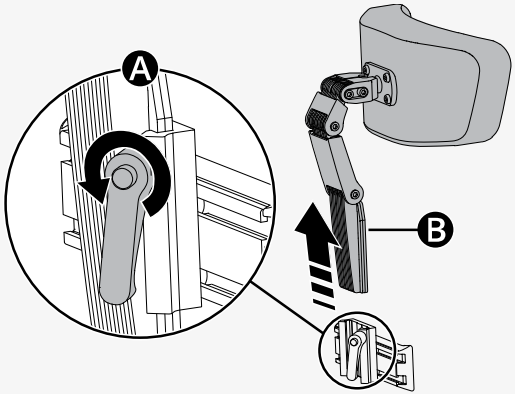

4.9.3 Removing the backrest

You can remove the backrest to make transportation of the wheelchair easier. First, remove the backrest cushion Ⓐ. It is attached with Velcro. Then carefully undo the clip Ⓑ on the backrest and pull the upper part of the backrest straight up Ⓒ.

If needed, you can also remove the headrest. See 4.9.1 *Headrest*, page 40.

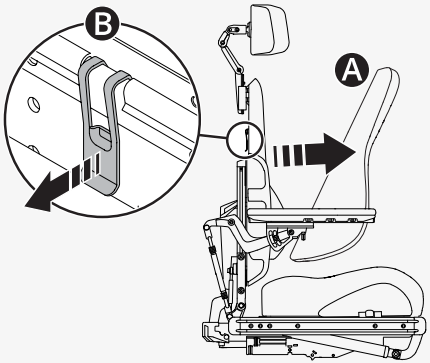

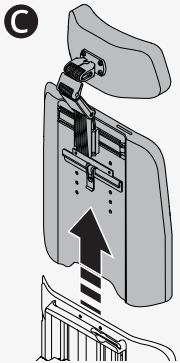

4.9.4 Armrest

This chapter shows you how to adjust a swiveling armrest and how to adjust armrest height and armrest angles.

4.9.4.1 Swiveling armrest

This chapter describes how you adjust a swiveling armrest. A swiveling armrest is an armrest that you can push in or out as preferred between certain settings. There is one locked setting Ⓐ and three swivel settings Ⓑ Ⓒ Ⓓ.

Swivel settings		
Ⓐ	Factory setting	Locked
Ⓑ	Factory setting	0° to +15°
Ⓒ	Custom setting	-15° to +15°
Ⓓ	Custom setting	0° to +30°

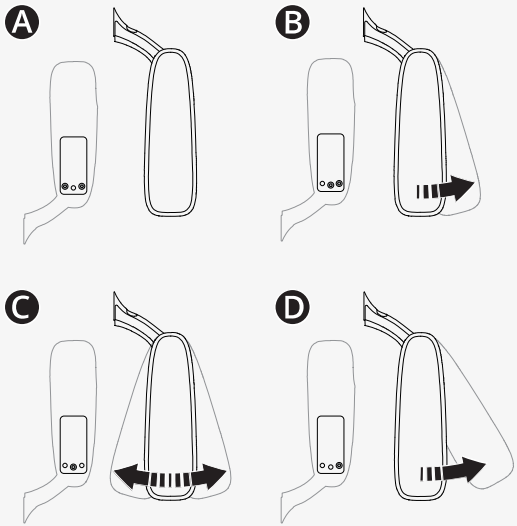

This is how you change the swivel setting.

🔧 Allen key 5 mm

1. Fold up the armrest.
2. Remove the screws from the current setting.
3. Insert and tighten the screws in the preferred setting.
4. Fold down the armrest.

4.9.4.2 Armrest height and armrest angles

This chapter shows you how to adjust the height of the armrest and the angles of the armrest. There are two ways to adjust the armrest angle.

This is how you adjust the height of the armrest. You can see the current height of the armrest on the backrest. The adjustment crank is located in the backrest.

🔧 Allen key 5 mm

🔧 Adjustment crank

1. Loosen the four screws Ⓐ on the backrest.

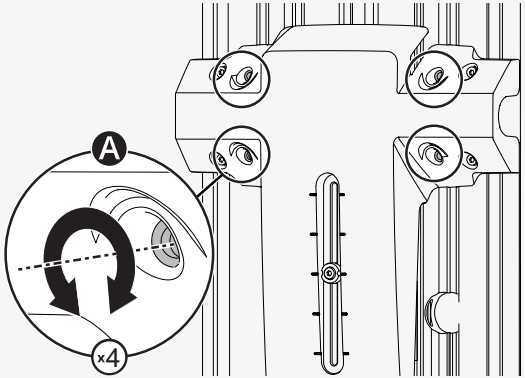

2. Remove the adjustment crank Ⓑ.
3. Use the adjustment crank to turn the adjustment screw Ⓒ until the armrest is in the preferred position.
4. Tighten the four screws on the backrest.

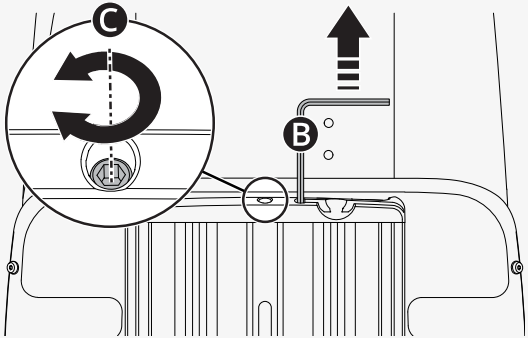

This is one way to adjust the angle of the armrest. The lower lock nut has a left-hand thread.

🔧 Wrench 14 mm

1. Loosen the two lock nuts Ⓐ on the adjustment bar Ⓑ.
2. Turn the adjustment bar to adjust the armrest angle to the preferred position.
3. Tighten the two lock nuts.

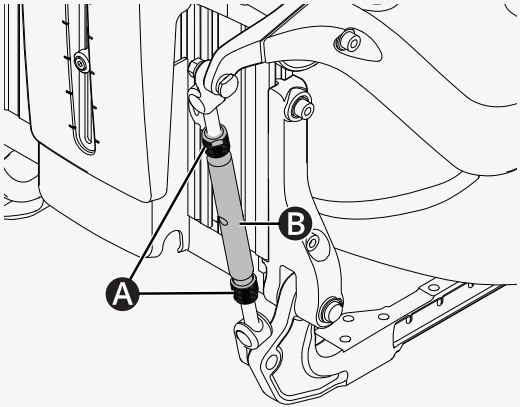

This is the other way to adjust the angle of the armrest.

🔧 Allen key 5 mm

1. Move the screw from the fixed position Ⓐ to the flexible position Ⓑ.
2. Adjust the armrest angle to the preferred position.
3. Tighten the screw Ⓑ.

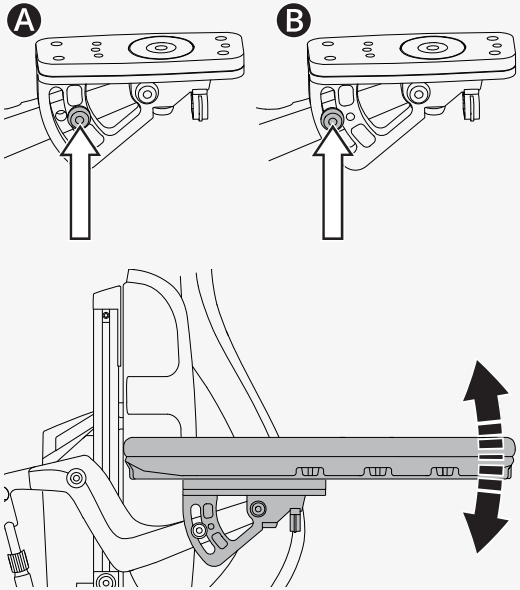

4.9.5 Footplates

You can adjust the height and the angle of the footplates.

This is how you adjust the height of the footplates. You can adjust the footplates separately if you prefer them at different heights.

🔧 Allen key 5 mm

1. Loosen the two screws on footplate Ⓐ.
2. Adjust the footplate to the preferred height and tighten the screws.

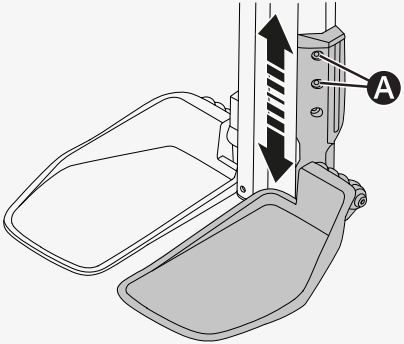

This is how you adjust the angle of the footplates. You can adjust the footplates separately if you prefer them at different angles.

🔧 Allen key 5 mm

🔧 Wrench 10 mm

1. Tilt up the footplate.
2. Loosen lock nut Ⓐ.
3. Turn stop screw Ⓑ up or down until the footplate has the preferred angle.
4. Tighten lock nut Ⓐ.

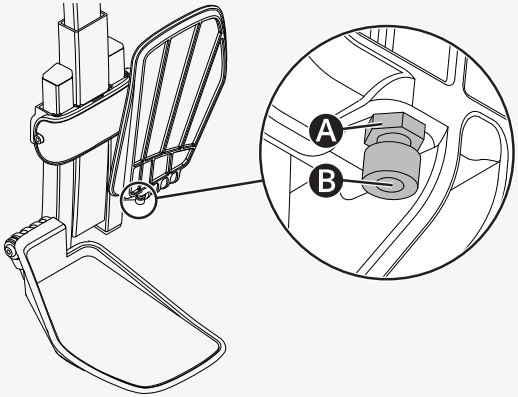

4.9.6 Lumbar support

This chapter shows you how to adjust the lumbar support. The lumbar support consists of three cushions with Velcro. If you want to adjust it, simply remove the backrest cushion and adjust the lumbar support as preferred.

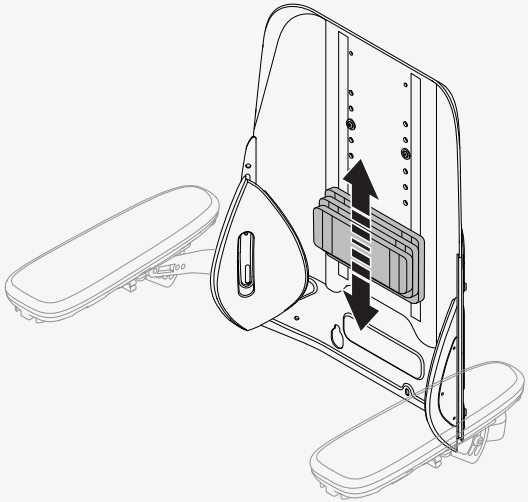

4.9.7 Trunk support

This chapter shows you how to adjust the height of the trunk support.

This is how you adjust the height of the trunk support.

🔧 Allen key 5 mm

1. Remove the backrest cushion.
2. Loosen the screw Ⓐ on the backrest that holds the trunk support in place.
3. Adjust the trunk support Ⓑ to the preferred position.
4. Tighten the screw Ⓐ.
5. Put back the backrest cushion.

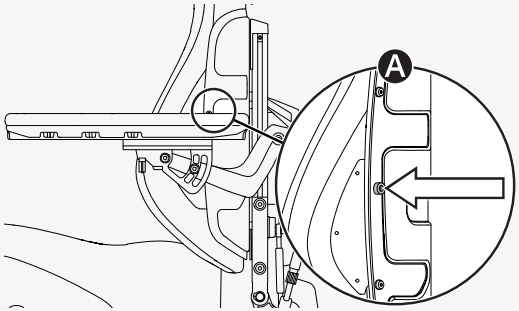

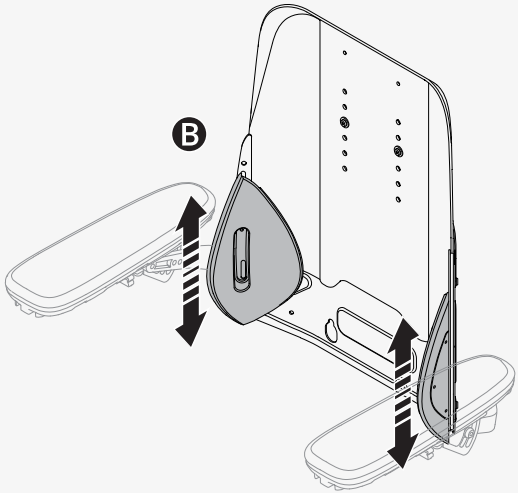

4.9.8 Chest support

This chapter gives you information about your chest support and shows you how to adjust the height and depth of the chest support.

This is the chest support provided with your Permobil wheelchair. Always use this chest support when you use the standing function.

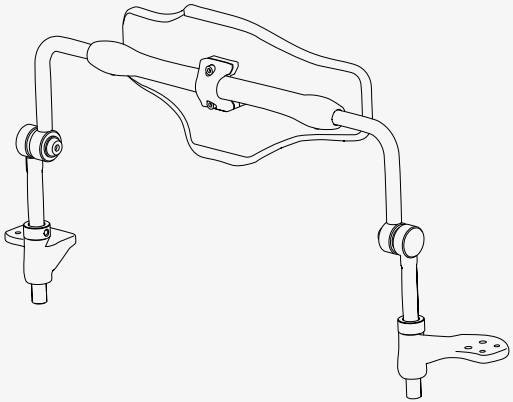

This is how you adjust height of the chest support.

🔧 Allen key 3 mm

1. Loosen the screws Ⓐ on the locking ring on either side of the chest support.
2. Adjust the chest support to the preferred height, but never so high that the fixing is not visible at the lower edge of the sleeve Ⓑ.
3. Tighten the screws on the locking ring.

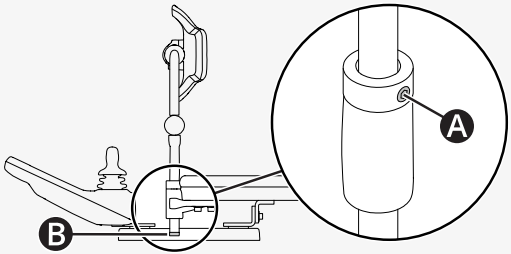

This is how you adjust the depth of the chest support.

🔧 Torque wrench

🔧 Allen key 4 mm

1. Loosen the two screws on the chest support.
2. Adjust the chest support to the preferred depth.
3. Torque the two screws to 24 N m (17.7 lb. ft.).

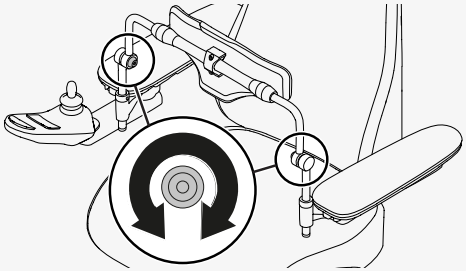

4.9.9 Knee support

This chapter gives you information about the position of the knee support and shows you how to remove and attach the knee support. Always use a knee support when you use the standing function.

The knee support shall be placed below the kneecap. If the knee support is not in the correct position, contact an authorized service technician. All adjustments of the knee support must be made by an authorized service technician.

You can remove the knee support from the leg rest to make it easier to get in and out of the wheelchair. The leg rest must be in its most vertical position (90° to the seat) before you can remove the knee support.

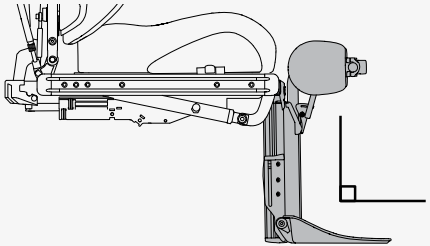

1. Make sure that the leg rest is in its most vertical position.
2. Press and hold the latch Ⓐ.
3. Lift the knee support straight up.

When you attach the knee support to your wheelchair, make sure that it is securely in position before you rely on it for support. If you do not properly secure the knee support, it can lead to bodily injury.

WARNING! Use leg rest tilt cautiously

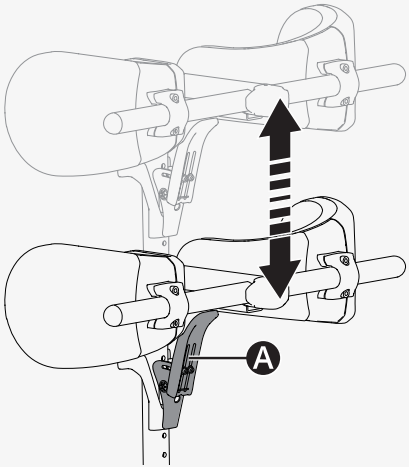

4.9.10 Rotational panel holder

You can adjust the distance between the armrest and the control panel, the resistance of the rotational panel holder, and the angle of the rotational panel holder.

This is how you adjust the distance between the armrest and the control panel.

Allen key 5 mm

1. Loosen the screw Ⓐ on the panel joint.
2. Adjust the control panel to the preferred position.
3. Tighten the screw.

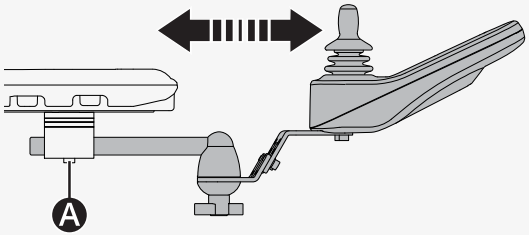

This is how you adjust the resistance of the rotational panel holder.

Loosen or tighten the knob Ⓐ on the friction joint to adjust how easily the rotational panel holder can be pushed to either side.

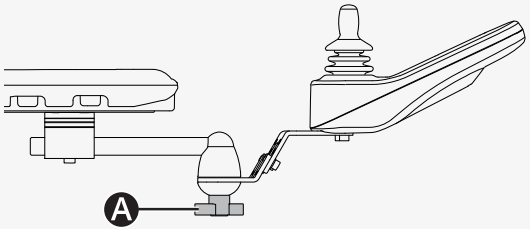

You can angle the rotational control panel to either side. This is how you adjust the angle.

🔧 Allen key 4 mm

1. Remove the screw Ⓐ on the side you want to angle.
2. Loosen the other screw Ⓐ.
3. Adjust the angle of the panel Ⓑ to the preferred position.
4. Tighten the two screws.

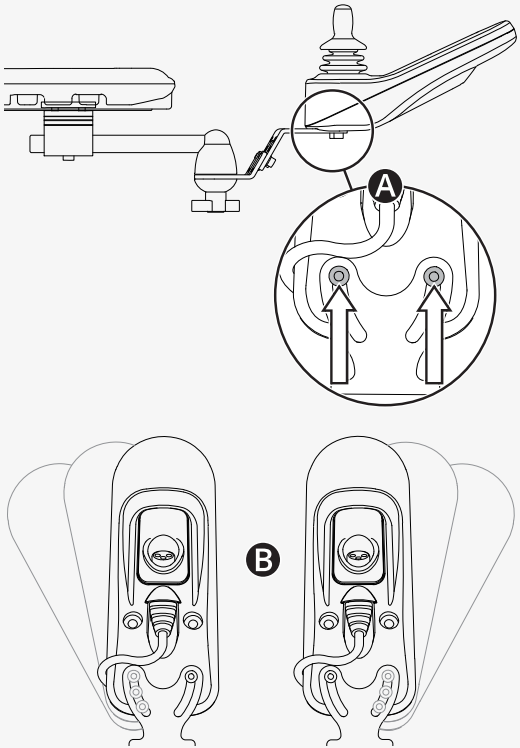

4.9.11 Parallel panel holder

You can adjust the distance between the armrest and the control panel. It is also possible to adjust the angle of the control panel.

This is how you adjust the distance between the armrest and the control panel. Leave a gap of at least 10 mm (0.4") between the armrest and the control panel.

- Torque wrench
- Allen key 5 mm

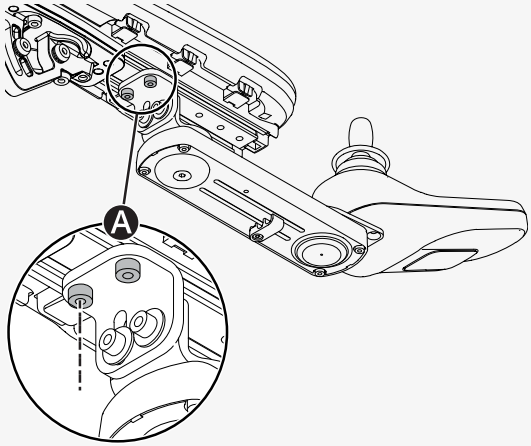

1. Loosen the screws Ⓐ enough to slide the panel holder.

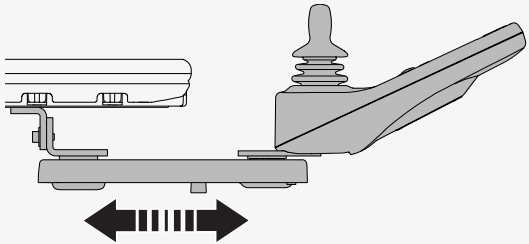

2. Adjust the panel to the preferred position.
3. Torque the screws to 9.8 N m (7.2 lb. ft.).

This is how you adjust the angle of the control panel.

🔧 Allen key 4 mm

Slide the panel to the preferred position. You can loosen or tighten the screw Ⓐ to adjust the resistance.

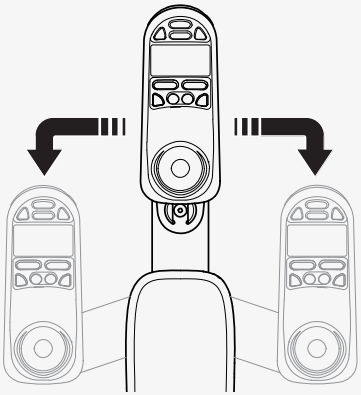

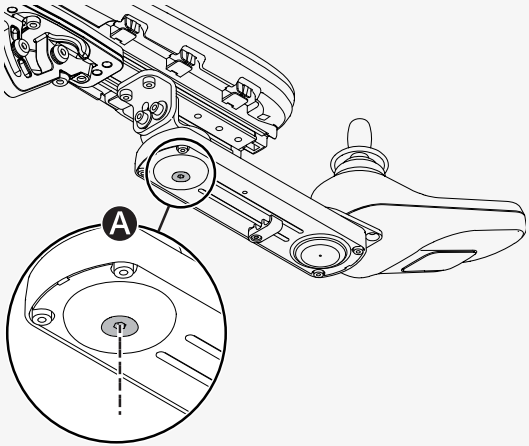

4.9.12 Positioning belt

Always wear your positioning belt. There is an accessory rail on each side of the seat frame where you can attach for example a positioning belt.

Wrench 10 mm

1. Screw the positioning belt in place in the rail's upper groove.

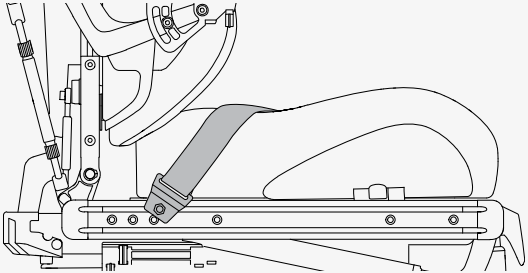

2. Make sure that the belt buckle locks properly in the snap lock.

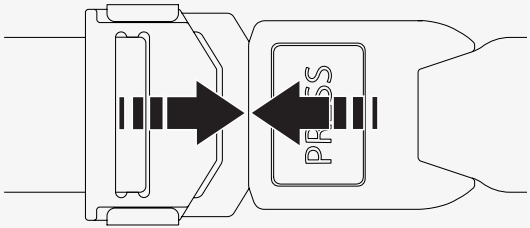

5 Maintenance

For the wheelchair to work well, it is important that you use it correctly and maintain it regularly. A well maintained wheelchair lasts longer and has a lower risk of defects. Only carry out maintenance and minor adjustments that are specified in the user manual. All other maintenance, service, and repairs must be carried out by a qualified service technician authorized by Permobil.

5.1 Maintenance and inspection schedule

Permobil recommends compliance with the following maintenance and inspection schedule. Contact your authorized dealer for all service-related needs or questions.

Maintenance and inspection schedule	Daily	Weekly	Monthly	Yearly
Check battery level indicator and charge the wheelchair if necessary.	X			
Make sure that the joystick panel and other control panels are not damaged.	X			
Make sure that all removable parts are securely fastened.	X			
Check positioning belts for wear and make sure buckles work.	X			
If the wheelchair is equipped with pneumatic tires, check tires and inflate as necessary.		X		
If the wheelchair is equipped with lights and turn signals, make sure that they are operational and clean.		X		
Clean the wheelchair and upholstery.			X	
Check upholstery, seating, and postural supports for wear.			X	
Check that the freewheel mode and the freewheel lever work properly.			X	
Complete inspection, safety check, and service performed by an authorized wheelchair dealer.				X

5.2 Cleaning

Regular care and maintenance will prevent unnecessary wear and damage to your Permobil product. Turn off the power before you clean the wheelchair.

5.2.1 Metal surfaces

Due to the high quality powder coating, optimum corrosion protection is guaranteed. Ideally, use a soft cloth or sponge, hot water, and a mild detergent for normal cleaning. Wipe down carefully with a cloth and water, and dry off.

Remove scuff marks from semi-matte surfaces with soft wax. Follow the instructions provided by the manufacturer of the soft wax.

Remove scuff marks and scratches from shiny surfaces with car polish. You can use either liquid or paste car polish. After you have polished, apply soft car wax to restore the original surface gloss.

5.2.2 Plastics

For normal cleaning, wash plastic surfaces with a soft cloth, mild detergent, and hot water. Rinse thoroughly and dry with a soft cloth. Do not use solvents or abrasive kitchen cleaners.

5.2.3 Upholstery, cloth, and vinyl

For normal cleaning, wash the upholstery with lukewarm water and a mild, non-abrasive soap. Use a soft cloth or brush. Wipe off any water or soapy water residues with a clean, dry cloth. Let the surface dry. Repeat this procedure to remove stubborn dirt or stains. Ink spots can sometimes be removed with soap and water followed by isopropyl alcohol.

Do not use any other cleaning methods than those listed here. Other cleaning methods can attack and degrade the vinyl and can also void the wheelchair's warranty.

If necessary, you can remove the cover before cleaning. See also the washing instructions on the upholstery materials.

5.3 Inflating the drive wheel tires

Only drive the wheelchair with the correct tire pressure. The tire pressure for the drive wheel tires is 250 kPa (35 psi). Permobil recommends that you check the tire pressure weekly and after any significant change in temperature or altitude.

Incorrect tire pressure can make the wheelchair unstable and difficult to drive. It can also result in abnormal wear, punctures, a shorter driving range, and damage to the wheel assembly.

This is how you inflate the drive wheel tires.

1. Unscrew and remove the valve cap from the tire air valve.
2. Connect the compressed air nozzle to the valve and adjust the tire pressure to the prescribed level.
3. Put the valve cap back.

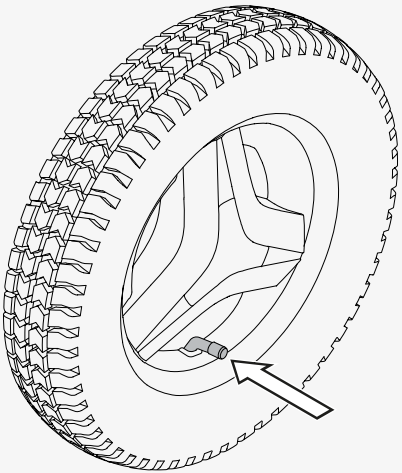

5.4 Positioning belt

Check the condition of the positioning belt regularly in case any damage or wear has occurred. If signs of damage or wear appear, replace the positioning belt immediately through your Permobil dealer.

6 Restrictions and limitations

This chapter contains information about seat depth.

Users above 110 kg (240 lb.) must have a seat depth of 445 mm (18") or more. If your wheelchair has a seat depth of less than 445 mm (18") and your weight increases to more than 110 kg (240 lb.), contact your service technician.

7 Troubleshooting

The following troubleshooting guide describes a number of faults and events which can occur when you use the wheelchair, together with suggested remedies.

Note that the guide cannot describe all the problems and events which may occur and you should always contact your service provider or Permobil technical support if you need additional assistance. Troubleshooting and repairs of electronics must always be performed by qualified personnel with good knowledge of the wheelchair's electronics.

Event	Possible cause	Remedy
The wheelchair does not start.	The batteries are discharged.	Charge the batteries.
	The cable connection to the control panel has come loose.	Insert the cable in the control panel.
	The main circuit breaker is turned off.	Turn on the main circuit breaker. See page 39.
	The main circuit breaker has tripped.	Reset the main circuit breaker once. See page 39.
The wheelchair cannot be charged.	The main circuit breaker is turned off.	Turn on the main circuit breaker. See page 39.
	The charging circuit breaker has tripped.	Wait five minutes. The charging circuit breaker will automatically reset.

Event	Possible cause	Remedy
The wheelchair cannot be driven.	The battery charger is connected.	Disconnect the battery charger.
	The wheelchair is in freewheel mode.	Exit freewheel mode and restart the wheelchair.
	The wheelchair is locked.	Unlock the wheelchair.
	A seat function has triggered the automatic drive inhibit.	Make sure that the backrest and the leg rest are not tilted and that the seat is not tilted or lifted.
	The motors have gotten too warm.	Turn off the wheelchair and wait for the motors to cool down.
The wheelchair switches itself off after a certain period of inactivity (20–30 minutes).	The energy saving mode has been activated.	Press the start button on the control panel to turn on the wheelchair again.
The wheelchair stops while being driven.	The main circuit breaker has tripped.	Reset the main circuit breaker once. See page 39.
The wheelchair can only be driven at reduced speed.	A seat function has triggered the automatic speed restriction.	Make sure that the backrest and the leg rest are not tilted and that the seat is not tilted or lifted.

8 General information

This chapter contains information about warranty, standards and regulations, reporting incidents, scrapping and recycling, and technical specifications.

8.1 Warranty

Contact your dealer or Permobil Inc. USA for information about the warranty period for this product.

Product Warranty Information sets forth the conditions of the warranty. For further information about applicable warranties, see https://permobilus.com/support/warranties/.

8.2 Standards and regulations

This product fulfills the following requirements:

- Electrically powered wheelchairs, scooters and their chargers – Requirements and test methods (EN 12184)
- Wheelchair standard series ISO 7176
- U.S. Food and Drug Administration's regulation 21 CFR 820
- Medical Device Regulation (EU) 2017/745

8.3 Electromagnetic interference

EMI stands for Electromagnetic Interference, which is an electromagnetic emission that causes a disturbance in another piece of electrical equipment. EMI can be caused by anything that carries rapidly changing electrical currents, for example mobile telephones, large medical equipment, or other sources of electromagnetic radiation. Modifications to the device can make it more susceptible to EMI. There is no easy way to evaluate the effect of a modification on the overall EMI of the device.

Your wheelchair has passed the test of immunity to electromagnetic fields. As of May 1994, 20 V/m is a generally achievable and useful immunity level, and it is also the immunity level of your wheelchair in its factory configuration. However, it cannot be excluded that electromagnetic emissions can affect your wheelchair, for example in environments such as shopping malls and hospitals.

Nevertheless, it is permitted to use cordless telephones and cell phones, including hands-free devices, while operating your power wheelchair. In the unlikely event that you should experience abnormal operation of your wheelchair, stop driving immediately, turn off the wheelchair, and report the incident as soon as possible.

8.4 Federal Communications Commission (FCC) statement

This equipment has been tested and found to comply with the limits for a Class B digital device, pursuant to part 15 of the FCC rules. These limits are designed to provide reasonable protection against harmful interference in a residential installation. This equipment generates, uses and can radiate radio frequency energy and, if not installed and used in accordance with the instructions, may cause harmful interference to radio communications. However, there is no guarantee that interference will not occur in a particular installation. If this equipment does cause harmful interference to radio or television reception, which can be determined by turning the equipment off and on, the user is encouraged to try to correct the interference by one or more of the following measures:

- Reorient or relocate the receiving antenna.
- Increase the separation between the equipment and receiver.
- Connect the equipment into an outlet on a circuit different from that to which the receiver is connected.

- Consult the dealer or an experienced radio/TV technician for help.

FCC caution: Any changes or modifications not expressly approved by the party responsible for compliance would void the user's authority to operate this equipment.

This device complies with part 15 of the FCC rules. Operation is subject to the following two conditions:

1. This device may not cause harmful interference.
2. This device must accept any interference received, including interference that may cause undesired operation.

8.4.1 Radiation Exposure statement

This equipment complies with FCC radiation exposure limits set forth for an uncontrolled environment. End users must follow the specific operating instructions for satisfying RF exposure compliance.

To maintain compliance with FCC RF exposure compliance requirements, please follow operation instruction as documented in this guide. This transmitter must not be co-located or operating in conjunction with any other antenna or transmitter, except the transmitter built-in with this device.

8.5 Industry Canada statement

The Power Platform on your wheelchair complies with the license-exempt Radio Standards Specifications (RSSs) of Innovation, Science and Economic Development Canada (ISED). ISED is formerly known as Industry Canada. Operation is subject to the following two conditions:

1. This device may not cause interference; and
2. This device must accept any interference, including interference that may cause undesired operation of the device.

8.6 Reporting incidents

If a serious incident occurs, you must contact a competent authority and Permobil by phone or e-mail.

8.7 Scrapping and recycling

Contact Permobil for information about scrapping agreements in force.

8.8 Technical specifications

Mass of the heaviest part	Backrest 7.5 kg (16.5 lb.)
Pivot width	1200 mm (47")
Minimum turning diameter	1490 mm (59")
Required width of angled corridor	800 mm (31.5")
Required doorway entry depth	1350 mm (53")
Required corridor width for side opening	800 mm (31.5")
Ground clearance	80 mm (3")
Ability to negotiate obstacles (approach distance 0 cm [0"])	50 mm (2")
Ability to negotiate obstacles (approach distance 50 cm [20"])	75 mm (3")
Battery cycle life	450 cycles
Battery type and nominal voltage	Sealed lead acid, 2 x 12 V, group 24
Occupant mass group	III
Maximum speed (forward on horizontal) (Group 3, Group 4)	9.3 km/h (5.8 mph), 12 km/h (7.5 mph)
Theoretical continuous driving range (Group 3, Group 4)[1]	29 km (18.0 mi), 30 km (18.5 mi)

1. Actual driving range will vary based on driving conditions, battery conditions, and terrain.

How to contact your production unit

Sundsvall, Sweden	Nashville, USA
PU SUN Permobil AB Klökanvägen 16 863 41 Sundsvall Sweden	PU NAS Permobil Inc. 300 Duke Drive Lebanon, TN 37090 USA
+46 60 59 59 00	+1 800 736 0925
+46 60 57 52 50	+1 800 231 3256
info@permobil.com	support@permobil.com
www.permobil.com	www.permobil.com

How to contact your local office

United States

Permobil Inc.

300 Duke Drive
Lebanon, TN 37090
USA

+1 800 736 0925

+1 800 231 3256

support@permobil.com

www.permobil.com

PU NAS

Dealer’s address and telephone number

permobil

339834 eng-US

7 330818 381934

www.permobil.com